JVC

SERVICE MANUAL

COMPACT COMPONENT SYSTEM

MX-D401T

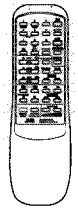

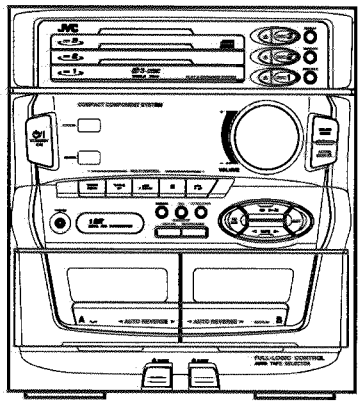

COMPACT disc DIGITAL AUDIO

Area Suffix	
A	Australia
B	U.K.
C	Canada
E	Continental Europe
EN	North Europe
G	Germany
J	U.S.A.
UB	Hong.Kong
UP	Korea
US	Singapore
UT	Formosa
U	Other Areas
VX	Eastern Europe

Contents

1.Safety Precautions..... Page1-1
2.Safety Precaution about MX-D401T.....2-1~3
3.Instructions..... 3-1~16
4.Location of Main Parts.....4-1~2
5.Removal of Main parts..... 5-1~15
6.Main Adjustmen.....6-1~5
7.Out Line of Main IC..... 7-1
8.Wiring Connections.....8-1
9.Analytic Drawing and Parts List..... 9-1~8
10.Block Diagram..... 10-1
11.Standard Schematic Diagram..... 11-1~11
12.Location of P.C.Board Parts .....12-1~9
13.Electrical Parts List ..... 13-1~18
14.Packing ..... 14-1~4

COPYRIGHT © 1997 VICTOR COMPANY OF JAPAN, LTD.

No.10039
July 1997

1.Safety Precautions

1. The design this product contains special hardware and many circuits and components specially for safety purposes. For continued protection, no changes should be made to the original design unless authorized in writing by the manufacturer. Replacement parts must be identical to those used in the original circuits. Service should be performed by qualified personnel only.
2. Alterations of the design or circuitry of the product should not be made. Any design alterations of the product should not be made. Any design alterations or additions will void the manufacture's warranty and will further relieve the manufacture of responsibility for personal injury or property damage resulting therefrom.
3. Many electrical and mechanical parts in the product have special safety－related characteristics. These characteristics are often not evident from visual inspection nor can the protection afforded by them necessarily be obtained by using replacement components rated for higher voltage, wattage, etc. Replacement parts which have these special safety characteristics are identified in the parts list of service manual. Electrical components having such features are identified by (⚠)on the schematic diagram and parts list in the service manual. The use of a substitute replacement which does not have the same safety characteristics as the recommended replacement part shown in the parts list of service manual may create shock, fire, or other hazards.
4. The leads in the products are routed and dressed with ties, clamps , tubings, barriers and the like to be separated from live parts, high temperature parts, mpving parts and or sharp edges for the prevention of electric shock and fire hazard. When service is required, the original lead routing and dress should be observed, and it should be confirmed that they have been returned to normal, after reassembling.
5. Leakage current check (Electrical shock hazard testing)

   After re－assembling the product, always perform an isolation check on the exposed metal parts of the product (antenna terminals, knobs, metal cabinet, screw heads, headphone jack, control shafts, etc.) to be sure the product is safe to operate without danger of electrical shock. Do not use a line isolation transformer during this check.

   - Plug the AC line cord directly into the AC outlet. using a"Leakage current tester", measure the leakage current from each exposed metal part of the cabinet, particulary any exposed metal part having a return path to the chassis, to a known good earth ground. Any leakage current must not exposeed 0.5mA AC(r.m.s.)
   - Alternate check method

     Plug the AC line cord directly into the AC outlet. Use an AC voltmeter having 1,000 ohms per volt or more sensitivity in the following manner. Connect a 1,500 ohms 10W resistor paralleled by a 0.15 μ F AC type capacitor between an exposed metal part and a known good earth ground. Measure the AC voltage across the resistor with the AC voltmeter. Move the resistor connection to each exposed metal part, particularly any exposed metal part having a return path to the chassis, and measure the AC voltage across the resistor. Now, reverse the plug in the AC outlet and repeat each measurement. Any voltage measured

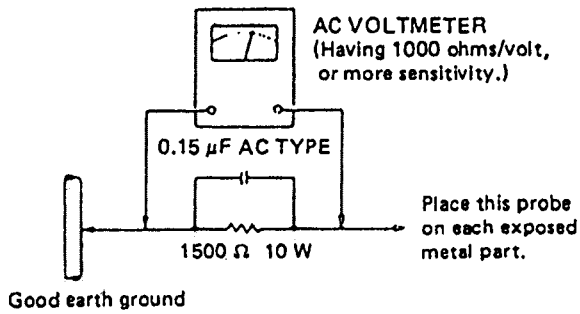

Warning (Except to C/J/U version)

1. This equipment has been designed and manufactured to meet international safety standards.
2. It is the legal responsibility of the repairer to ensure that these safety standards are maintaintaind.
3. Repairs must be made in accordance with the relevant safety standards.
4. It is essential that safety critical components are replaced by approved parts.
5. If mains voltage selector is provided, check setting for local voltage.

⚠ CAUTION

Burrs formed during molding may be left over on some parts of the chassis. Therefore, pay attention to such burrs in the case of preforming repair of this system.

2.Safety Precaution about MX-D401T

IMPORTANT FOR LASER PRODUCTS
PRECAUTIONS (For B/E/EN/G/VX/US Version)

1. CLASS 1 LASER PRODUCT
2. **DANGER:** Invisible laser radiation when open and interlock failed or defeated. Avoid direct exposure to beam.
3. **CAUTION:** Do not open the rear cover. There are no user serviceable parts inside the unit; leave all servicing to qualified service personnel.
4. **CAUTION:** The compact disc player uses invisible laser radiation and is equipped with safety switches which prevent the emission of radiation when the CD holder is open. It is dangerous to defeat the safety switches.
5. **CAUTION:** Use of controls for adjustments and the performance of procedures other than those specified herein may result in exposure to hazardous radiation.
6. **CAUTION:** The laser is able to function, if safety switches out of function. The laser light is invisible, avoid exposure, do not disassemble the laser unit, but replace the complete unit.

IMPORTANT FOR LASER PRODUCTS
REPRODUCTION OF LABELS

① CLASSIFICATION LABEL, PLACED ON REAR ENCLOSURE

CLASS 1
LASER PRODUCT

② WARNING LABEL, PLACED INSIDE THE UNIT

DANGER: Invisible laser radiation when open and interlock failed or defeated. AVOID DIRECT EXPOSURE TO BEAM. (e)	**VARNING:** Osynlig laserstrålning när denna del är öppnad och spärren är urkopplad. Betrakta ej strålen. (s)	**ADVARSEL:** Usynlig laserstråling ved åbning, når sikkerhedsafbrydere er ude af funktion. Undgå udsættelse for stråling (d)	**VARO:** Avattaessa ja suojalukitus ohitettaessa olet alttiina näkymättömälle lasersäteilylle. Älä katso säteeseen. (f)

CAUTION
RISK OF ELECTRIC SHOCK
DO NOT OPEN

CAUTION: TO REDUCE THE RISK OF ELECTRIC SHOCK.
DO NOT REMOVE COVER (OR BACK).
NO USER-SERVICEABLE PARTS INSIDE.
REFER SERVICING TO QUALIFIED SERVICE PERSONNEL.

The lightning flash with arrowhead symbol, within an equilateral triangle, is intended to alert the user to the presence of uninsulated "dangerous voltage" within the product's enclosure that may be of sufficient magnitude to constitute a risk of electric shock to persons.

The exclamation point within an equilateral triangle is intended to alert the user to the presence of important operating and maintenance (servicing) instructions in the literature accompanying the appliance.

IMPORTANT FOR LASER PRODUCTS
PRECAUTIONS (For C/J/U Version)

1. CLASS 1 LASER PRODUCT
2. **DANGER:** Invisible laser radiation when open and interlock failed or defeated. Avoid direct exposure to beam.
3. **CAUTION:** Do not open the rear cover. There are no user serviceable parts inside the unit; leave all servicing to qualified service personnel.
4. **CAUTION:** The compact disc player uses invisible laser radiation and is equipped with safety switches which prevent the emission of radiation when the CD holder is open. It is dangerous to defeat the safety switches.
5. **CAUTION:** Use of controls for adjustments and the performance of procedures other than those specified herein may result in exposure to hazardous radiation.
6. **CAUTION:** The laser is able to function, if safety switches out of function. The laser light is invisible, avoid exposure, do not disassemble the laser unit, but replace the complete unit.

IMPORTANT FOR LASER PRODUCTS

REPRODUCTION OF LABELS

US JVC CORP. 41SLATER DRIVE ELMWOOD PARK. N.J.07407
MANUFACTURED AT *2

Product complies with DHHS Rules 21-CFR Subchapter J in effect at date of manufacture.
MANUFACTURED
*1

Notes:
* 1 The date of manufacture.
* 2 The ID code of manufacturing plant.

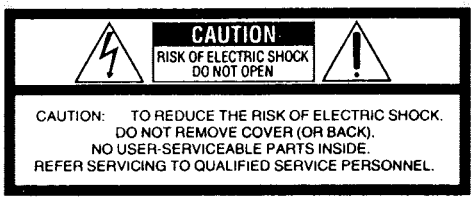

The lightning flash with arrowhead symbol, within an equilateral triangle, is intended to alert the user to the presence of uninsulated "dangerous voltage" within the product's enclosure that may be of sufficient magnitude to constitute a risk of electric shock to persons.

The exclamation point within an equilateral triangle is intended to alert the user to the presence of important operating and maintenance (servicing) instructions in the literature accompanying the appliance.

■ IMPORTANT
: Fuse Replacement Marking Check

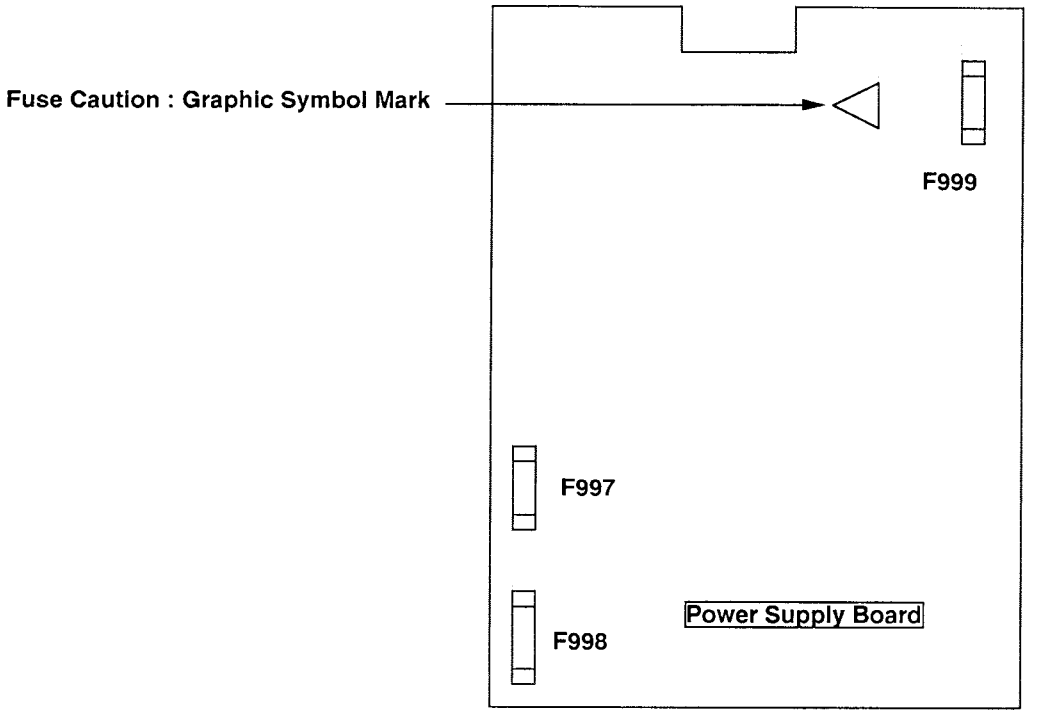

MX-D401T C/J

Full Fusereplacement Marking

Graphic symbol mark (This symbol means fast blow type fuse.)

should be read as follows:

FUSE CAUTION

F999 : FOR CONTINUED PROTECTION
AGAINST RISK OF FIRE, REPLACE ONLY WITH
SAME TYPE 1.0 ▪A, 250 ▪V FUSE.

F998 : FOR CONTINUED PROTECTION
F997 AGAINST RISK OF FIRE, REPLACE ONLY WITH
SAME TYPE 1.25 ▪A, 250▪ V FUSE.

MX-D401T C/J

Marquage Pour Le Remplacement Complet De Fusible

Le symbole graphique (Ce symbole signifie fusible de type á fusion rapide.)

doit être interprété comme suit:

PRECAUTIONS SUR LES FUSIBLES

F999: POUR UNE PROTECTION CONTINUE
CONTRE DES RISQUES D'INCENDIE,
REMPLACER SEULEMENT PAR UN FUSIBLE
DU MEME TYPE 1.0▪A, 250▪V.
F998: POUR UNE PROTECTION CONTINUE
F997CONTRE DES RISQUES D'INCENDIE,
REMPLACER SEULEMENT PAR UN FUSIBLE
DU MEME TYPE 1.25 ▪A, 250 V▪

JVC

VICTOR COMPANY OF JAPAN, LIMITED

JVC

COMPACT COMPONENT SYSTEM

CA-D301T/CA-D401T

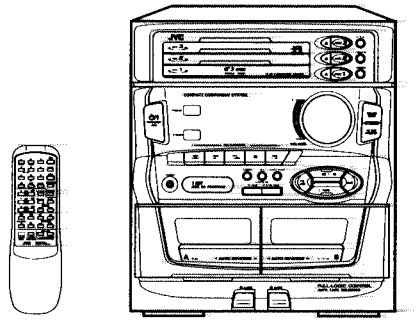

COMPACT disc DIGITAL AUDIO

INSTRUCTIONS

For Customer Use:

Enter below the Model No. and Serial No. which are located either on the rear, bottom or side of the cabinet. Retain this information for future reference.

Model No. _____

Serial No. _____

EN

0497TTYMACJEM

FMUN9015-671M
[B]

Warnings, Cautions and Others

IMPORTANT for the U.K.

DO NOT cut off the mains plug from this equipment. If the plug fitted is not suitable for the power points in your home or the cable is too short to reach a power point, then obtain an appropriate safety approved extension lead or consult your dealer.

BE SURE to replace the fuse only with an identical approved type, as originally fitted.

If nontheless the mains plug is cut off ensure to remove the fuse and dispose of the plug immediately, to avoid a possible shock hazard by inadvertent connection to the mains supply.

If this product is not supplied fitted with a mains plug then follow the instructions given below:

IMPORTANT:

DO NOT make any connection to the terminal which is marked with the letter E or by the safety earth symbol or coloured green or green-and-yellow.

The wires in the mains lead on this product are coloured in accordance with the following code:

Blue : Neutral
Brown : Live

As these colours may not correspond with the coloured markings identifying the terminals in your plug proceed as follows:

The wire which is coloured blue must be connected to the terminal which is marked with the letter N or coloured black.

The wire which is coloured brown must be connected to the terminal which is marked with the letter L or coloured red.

IF IN DOUBT - CONSULT A COMPETENT ELECTRICIAN.

IMPORTANT FOR LASER PRODUCTS

REPRODUCTION OF LABELS

1. CLASSIFICATION LABEL, PLACED ON REAR ENCLOSURE

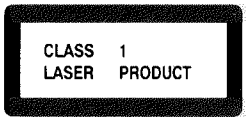

2. WARNING LABEL, PLACED INSIDE THE UNIT

1. CLASS 1 LASER PRODUCT
2. **DANGER**: Invisible laser radiation when open and interlock failed or defeated. Avoid direct exposure to beam.
3. **CAUTION**: Do not open the top cover. There are no user serviceable parts inside the Unit; leave all servicing to qualified service personnel.

Caution — POWER switch!
Disconnect the mains plug to shut the power off completely. The POWER switch in any position does not disconnect the mains line. The power can be remote controlled.

CAUTION
To reduce the risk of electrical shocks, fire, etc.:
1. Do not remove screws, covers or cabinet.
2. Do not expose this appliance to rain or moisture.

Caution: Proper Ventilation
To avoid risk of electric shock and fire, and to prevent damage, locate the apparatus as follows:
1 Front:No obstructions and open spacing.
2 Sides/ Top/ Back:No obstructions should be placed in the areas shown by the dimensions below.
3 Bottom:Place on the level surface. Maintain an adequate air path for ventilation by placing on a stand with a height of 10 cm or more.

Front view

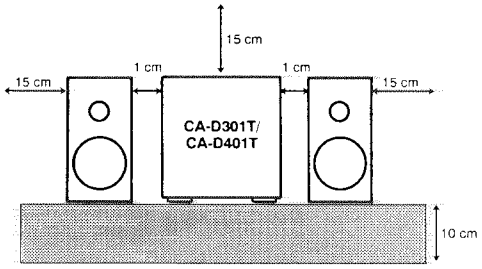

Side view

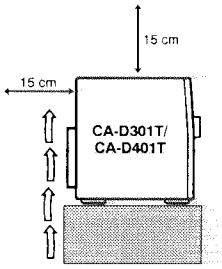

Thank you for purchasing the JVC Compact Component System.
We hope it will be a valued addition to your home, giving you years of enjoyment.
Be sure to read this instruction manual carefully before operating your new stereo system.
Here you will find all the information you need to set up and use the system.
For questions that are not be answered in the manual, please contact your dealer.

Features

Easy operation

COMPU PLAY

Great sound

Triple Tray

Here are some of the things that make your System powerful and easy to use.

- The controls and operations have been redesigned to make them very easy to use, so you can spend your time listening to music.
  - With the One Touch Operation feature of JVC's **COMPU PLAY** you can turn on the System and start the radio, the Cassette Deck, or the CD Player with a single touch.
- To get such great sound from such a compact package the System has:
  - Programmed sound mode includes live surround effects **D. CLUB, HALL,** and **STADIUM**. It also includes S.E.A (Sound Effect Amplifier) effects **ROCK, CLASSIC,** and **POP**.
- CD changer function can operate 3 discs.
  - Discs can be changed during play using the **TRIPLE TRAY**.
  - Continuous, random or program play of 3 discs.
- Includes a timer for recording broadcasts while you are out, and an easy-to-use Sleep timer.

How This Manual Is Organized

In this manual we have incorporated some special features:

- Basic information that is the same for many different functions is grouped in one place, and not repeated in each procedure. For instance, in the section on playing a CD, we do not repeat the information about setting the volume and the sound conditions, which are discussed in the Common Operations section.
- Name of buttons and controls are written in all capital letters like this: SOUND MODE.
- When we are talking about the Function, rather than the BUTTON or DISPLAY, only the first letter is capitalized.

The manual has a table of contents to help you quickly look up what you want to know.
We've enjoyed making this manual for you, and hope you will use it to enjoy the sound and many features built into your System.

IMPORTANT CAUTIONS

1. Installation of the Unit

- Select a place which is level, dry and neither too hot nor too cold. (Between 5°C and 35°C or 41°F and 95°F.)
- Leave sufficient distance between the Unit and a TV.
- Do not use the Unit in a place subject to vibrations.

2. Power cord

- Do not handle the power cord with wet hands!
- Some power (12 watts) is always consumed as long as the power cord is connected to the wall outlet.
- When unplugging the Unit from the wall outlet, always pull the plug, not the power cord.

3. Malfunctions, etc.

- There are no user serviceable parts inside. If anything goes wrong, unplug the power cord and consult your dealer.
- Do not insert any metallic object into the Unit.

Table of Contents

Features 1
How This Manual Is Organized 1
IMPORTANT CAUTIONS 1

Getting Started 3
Accessories 3
How To Put Batteries In the Remote Control 3
Using the Remote Control 3
Connecting the FM Antenna 4
Connecting the AM (MW/LW) Antenna 4
Connecting the Speakers 5
Connecting Auxiliary Equipment 5
COMPU PLAY 6

Common Operations 7
Turning the Power On and Off 7
Turning the System On 7
Turning the System Off 7
Adjusting the Volume 8
Reinforcing the Bass Sound 8
Sound Modes 8
Listening to Auxiliary Equipment 9

Using the Tuner 10
One Touch Radio 10
Tuning In a Station 10
Switching between Frequency Bands 10
Three ways to select a station 11
Presetting Stations 11
To Change the FM Reception Mode 11

Using the CD Player 12
The Quickest Way To Start a CD Is With the One Touch Operation 13
To Insert Discs 13
Basics of Using the CD Player — Normal Play 14
To Play a Disc 14
To Select a Disc, Track Or Passage Within a Track 14
Locating a Track With the Remote Control Directly 14
To Change Discs While Playing 14
Continuous Play 15
Programming the Playing Order of the Tracks 15
Random Play 16
Repeating a Selection or the Discs 17
Tray Lock Function 17
Locking the Electronic Lock 17
Unlocking the Electronic Lock 17

Using the Cassette Deck (Listening to a Tape) 18
One Touch Play 18
Regular Play 18
Fast Left And Fast Right 19
Music Scan 19
To Find the Beginning of the Current Selection 19
To Find the Beginning of the Next Selection 19
Reverse Mode 19

Using the Cassette Deck (Recording) 20
Things To Know Before You Start Recording 20
Standard Recording 21
To Record Any Sound Source To Tape 21
CD Direct Recording 22
Tape to Tape Recording (Dubbing) 22
How to Use the DUBBING Button 22

Using the Timer 23
Setting the Clock 23
Setting the Timer 24
Setting the SLEEP Timer 25

Care And Maintenance 26

Troubleshooting 27

Specifications 28

Getting Started

Accessories

Check that you have all of the following items, which are supplied with the System.

AM (MW/LW) Loop Antenna (1)
Remote Control (1)
Batteries (2)
FM Wire Antenna (1)

If any of these items is missing, contact your dealer immediately.

How To Put Batteries In the Remote Control

Match the polarity (+ and –) on the batteries with the + and – markings in the battery compartment.

R6P (SUM-3)/AA (15F)

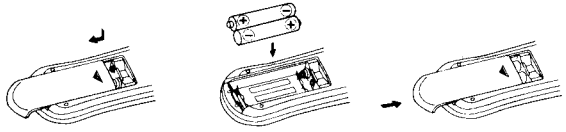

CAUTION: Handle batteries properly.
To avoid battery leakage or explosion:
- Remove batteries when the Remote Control will not be used for a long time.
- When you need to replace the batteries, replace both batteries at the same time with new ones.
- Don't use an old battery with a new one.
- Don't use different types of batteries together.

Using the Remote Control

The Remote Control makes it easy to use many of the functions of the System from a distance of up to 7m (23 feet) away.
You need to point the Remote Control at the remote sensor on the System's front panel.

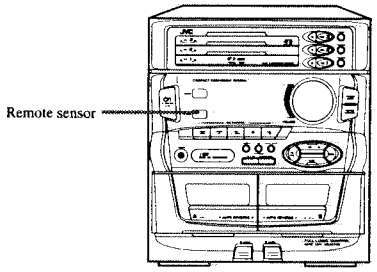

CAUTION: Make all connections before plugging the Unit into an AC power outlet.

Connecting the FM Antenna

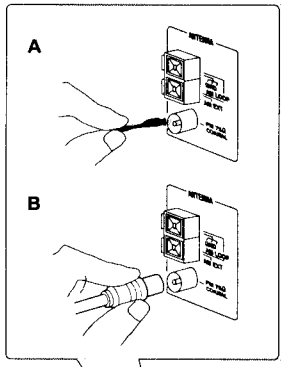

A. Using the Supplied Wire Antenna
The FM Wire Antenna provided can be connected to a FM 75-ohm COAXIAL as temporary measure.
Extend the supplied wire antenna horizontally.

B. Using the Standard Type Connector (Not Supplied)
A standard type connector (IEC or DIN 45325) should be connected to the FM 75-ohm COAXIAL terminal.

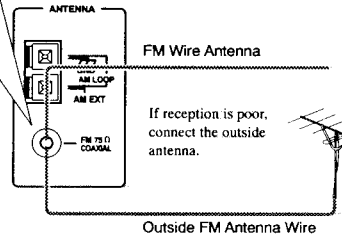

Before attaching a 75 ohm coaxial lead (the kind with a round wire going to an outside antenna), disconnect the supplied FM Wire Antenna.

CAUTION: To avoid noise, keep antennas away from metallic parts of the System, connecting cord and the AC power cord.

Connecting the AM (MW/LW) Antenna

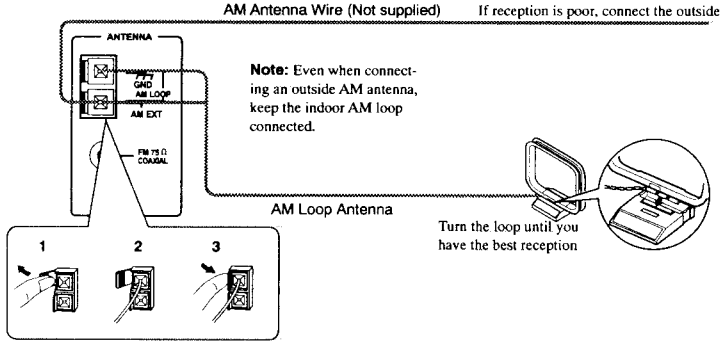

Note: Even when connecting an outside AM antenna, keep the indoor AM loop connected.

Turn the loop until you have the best reception

Snap the tabs on the loop into the slots of the base to attach the AM Loop.

CAUTION: Make all connections before plugging the Unit into an AC power outlet.

Connecting the Speakers

■ Please refer to instructions for speakers as well when you connect speakers.

For each speaker, connect one end of the speaker wire to the speaker terminals on the back of the System.

1. Open each of the terminals and insert the speaker wires firmly, then close the terminals.
2. Connect the red (+) and black (–) terminals of the right side speaker to the red (+) and black (–) terminals marked RIGHT on the System.
   Connect the red (+) and black (–) terminals of the left side speaker to the red (+) and black (–) terminals marked LEFT on the System.

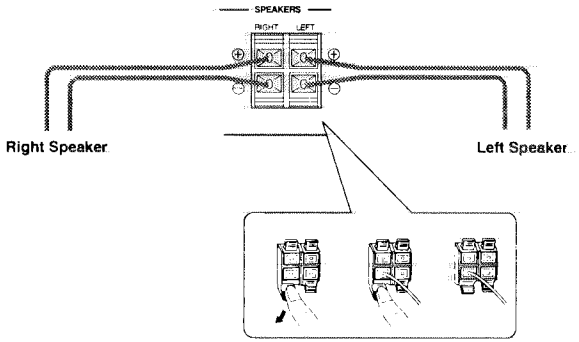

IMPORTANT: Use speakers with the correct impedance only. The correct impedance is indicated on the back panel.
CAUTION: If a TV is installed near speakers, the TV may display irregular colours. In this case, set the speakers away from the TV.

Connecting Auxiliary Equipment

VCR or other equipment
To listen to this source, press the AUX button.

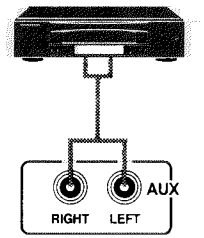

Now you can plug the AC power cord into the wall outlet, and your System is at your command!

COMPU PLAY

COMPU PLAY is JVC's feature that lets you control the most frequently used functions of the System with a single touch.
One Touch Operation starts playing a CD, turns on the radio, plays a tape, etc. with a single press of the play button for that function. What One Touch Operation does for you is to turn the power on, then start the function you have specified. If the Unit is not ready, such as no CD or tape in place, the Unit still powers on so you can insert a CD or tape.
How One Touch Operation works in each case is explained in the section dealing with that function.
The COMPU PLAY buttons are:

On the Unit

CD ▷/II button
CD Player DISC-1 to DISC-3 buttons
CD Player Open/Close (⏏) buttons
FM/AM button
◁ TAPE ▷ button
AUX button

On the Remote Control

FM/AM button
AUX button
CD control ►/II button
CD control DISC 1 to DISC 3 buttons
CD control Open/Close (⏏) buttons
Deck control ◄, ► buttons

Common Operations

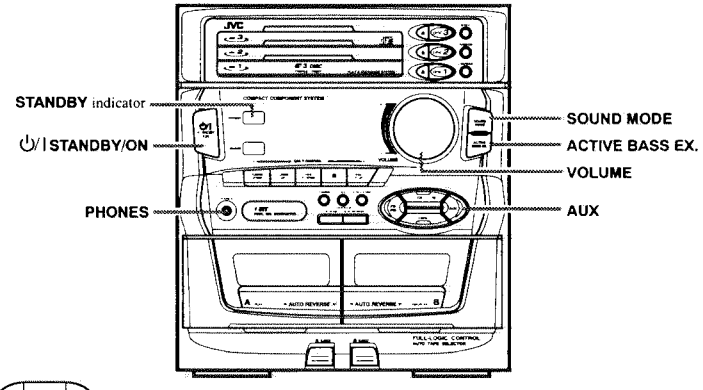

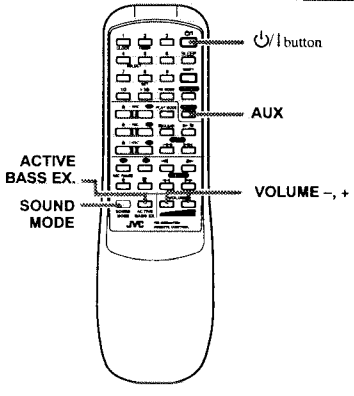

Display

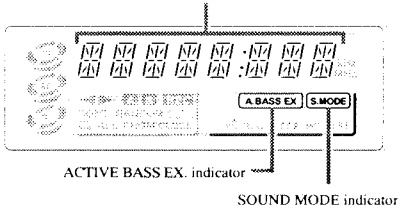

When the System is being used, the display shows other items as well. However, we have only shown the items described in this section.

Turning the Power On and Off

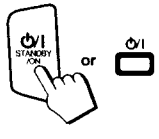

Turning the System On

Press the ⏻/I button.

The display comes on and the STANDBY indicator goes out.

The System comes on ready to continue in the mode it was in when the power was last turned off.

- If the last thing you were doing was listening to a tape in Deck B, you are now ready to listen to a tape again in Deck B, or you can change to another source.
- If you were listening to the Tuner last, the Tuner comes on playing the station it was last set to.

Turning the System Off

Press the ⏻/I button again.

The STANDBY indicator lights up and the display is blank, except for the clock display.

- Some power (12 watts) is always consumed even though power is turned off (called Standby Mode).
- To switch off the Unit completely, unplug the AC power cord from the AC outlet. When you unplug the AC power cord, the clock will be reset to 0:00 immediately, and preset Tuner stations will be erased after a few days.

Adjusting the Volume

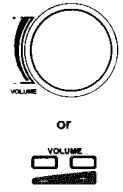

Turn the VOLUME control clockwise to increase the volume or anticlockwise to decrease it.
Turning the VOLUME control quickly also adjusts the volume level quickly.
When using the Remote Control, press the VOLUME + button to increase the volume or press the VOLUME – button to decrease it.
You can adjust the volume level between 0 and 50.

VOLUME 0

CAUTION: The Volume cannot be adjusted while the Unit is in STANDBY mode. DO NOT turn on the Unit and/or start playing any source without setting the VOLUME control to 0; otherwise, the sudden blast of sound can damage your hearing, speakers and/or headphones.

For private listening

Connect a pair of headphones to the PHONES jack. No sound comes out of the speakers.
Be sure to turn down the volume before connecting or putting on headphones.

Reinforcing the Bass Sound

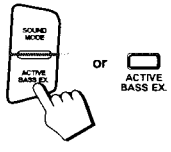

The richness and fullness of the bass sound is maintained regardless of how low you set the volume.
You can use this effect only for playback.

To get the effect, press the ACTIVE BASS EX. (Active Bass Extension) button.
The frame around the "A. BASS EX" indicator lights up.

A.BASS EX

To cancel the effect, press the button again.
The frame around the "A. BASS EX" indicator goes out.

A.BASS EX

Sound Modes

The System has some preset sound effects that give you control of the way your music sounds, so you can tailor it for your room and for the quality of the source. We can give you some idea of how each one affects the music, but the only way to really tell is to try them yourself.

- The preset sound modes include modes using surround effects and modes using S.E.A. effects.
- Sound Mode effects cannot be recorded.

Surround effect modes

D. CLUB (Dance Club)	Increases resonance and bass.
HALL	Adds depth and brilliance to the sound, like in a concert hall.
STADIUM	Adds clarity and spreads the sound, like in an outdoor stadium.

S.E.A. effect modes

ROCK	Boosts low and high frequencies.
CLASSIC	Set for wide and dynamic sound stereo systems.
POP	Good for vocal music.

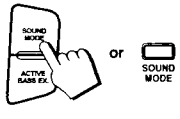

To get an effect, press the SOUND MODE button repeatedly until the Sound Mode you want appears in the display. The frame around the "S.MODE" indicator lights up.
Each time you press the SOUND MODE button, the display changes as shown below:

S.MODE

→ **D. CLUB** → **HALL** → **STADIUM** → **ROCK** → **CLASSIC** → **POP** → **FLAT** → (back to the beginning)

To cancel an effect, press the SOUND MODE button until "FLAT" appears on the display. The frame around the "S. MODE" indicator goes out.

S.MODE

To recall the previous Sound Mode, press the SOUND MODE button again.

Listening to Auxiliary Equipment

By playing the sound from auxiliary equipment through the System, you can gain control over how the music or program sounds. Once the connected equipment is playing through the System, you can apply the sound effects.

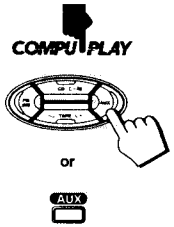

■ First make sure that the optional equipment is properly connected to the System. (See page 5).

1. Set the VOLUME control to 0.

2. Press the AUX button.
When System is in Standby mode, the Unit is automatically turned on and "AUX" appears on the display.

AUX

3. Start playing the equipment.

4. Adjust the VOLUME control to the desired listening level.

5. Select a sound effect mode, if you wish.

To Cancel the Setting

Change the source by starting any one of the System's built-in sound sources, such as the Tuner or CD Player.

Using the Tuner

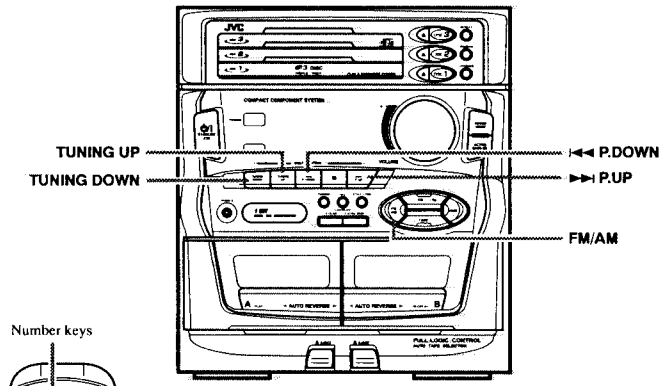

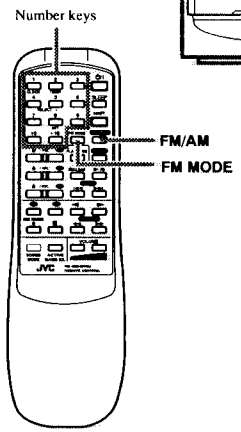

Display

Band display, Frequency display, Preset channel

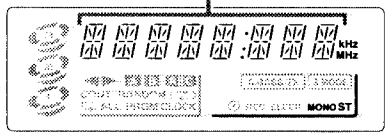

When the System is being used, the display shows other items as well. However, we have only shown the items described in this section.

You can listen to both FM and AM (MW/LW) stations. Stations can be tuned in manually, automatically, or from preset memory storage.

■ Before listening to the radio:
- Check that both the FM and AM (MW/LW) antennas are firmly connected. (See page 4).

One Touch Radio

Just press the FM/AM button to turn on the Unit and start playing the most recent station tuned in.

■ You can switch from any other sound source to the radio by pressing the FM/AM button.

Tuning In a Station

Press the FM/AM button to turn on the radio.
The Frequency of the previously selected channel appears on the display.

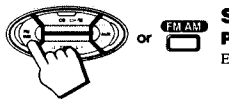

Switching between Frequency Bands

Press the FM/AM button.
Each time you press the button, the band alternates between FM and AM (MW/LW).

Three ways to select a station

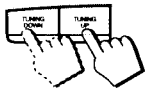

- Press the TUNING DOWN or TUNING UP button repeatedly to move from frequency to frequency until you find the one you want. (Manual Tuning).

OR

- Press and hold the TUNING DOWN or TUNING UP button for a few seconds, the frequency starts changing on the display. When a station is tuned in, the frequency stops changing. (Auto Tuning).

OR

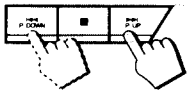

- Possible only after presetting stations.
  Press once and release the ⏮ P. DOWN or ⏭ P. UP button to go to the next preset station.

You can also use the Remote Control to tune in preset channels:

1. Press the FM/AM button so that you can receive the most recent station tuned in.
2. Select the station by entering the preset number in the number keys of the Remote Control.
   - Example: for channel 5, press 5. For channel 15, press +10 then 5. For channel 20, press +10, then 10. For channel 30, press +10 twice then 10.

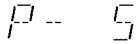

- After you have selected the preset number and the number is displayed, the broadcast frequency of the selected channel is displayed.

Presetting Stations

You can preset up to 30 FM stations and up to 15 AM stations for the preset numbers.
Note: In some cases, test frequencies have been already memorized for the tuner since the factory examined the tuner preset function before shipment. This is not a malfunction. You can preset the stations you want into memory by following the presetting method.

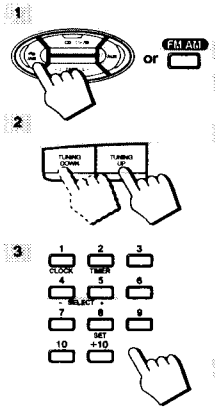

1. Select a band by pressing either the FM/AM button.

2. Press the TUNING DOWN or TUNING UP button to tune into a station.

3. Setting the preset number by pressing the number keys on the Remote Control continuously.

For preset numbers 1 to 10:
Press the number key for the preset number you want to set.
For preset numbers 11 to 20:
Press the 1 to 10 buttons after pressing the +10 button.
For preset numbers 21 to 30:
Press the 1 to 10 buttons after pressing the +10 button twice.

The preset number appears in the display after you have pressed the number keys. If the key is pressed continuously, the preset number display blinks. Release the button after the number starts to blink. This completes the preset setting.

4. Repeat steps 1 - 3 for each station you want to store in memory with a preset number.

CAUTION: If the Unit is unplugged or if a power failure occurs, the preset stations will be erased after a few days. If this happens, preset the station again.

To Change the FM Reception Mode

When an FM stereo broadcast is hard to receive or noisy, press the FM MODE button on the Remote Control so that the "MONO" indicator lights up in the display. Reception improves, but there is no stereo effect.

To restore the stereo effect, press the FM MODE button on the Remote Control so that the "MONO" indicator goes off. In this stereo mode, the "ST" indicator lights up and you can hear stereo effects, when a program is broadcast in stereo.

Using the CD Player

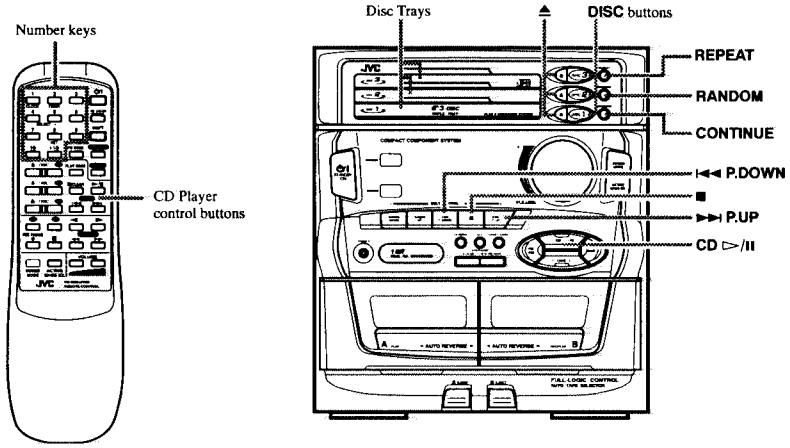

Display

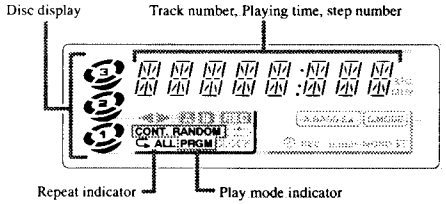

When the System is being used, the display shows other items as well. However, we have only shown the items described in this section.

Disc display
A red marker lights on the disc display for the disc number you have selected. This disc display blinks while a CD is being played.
The centre of the disc display is not lit while CD Player is checking that there is no disc in the disc tray for the corresponding disc number.

The System's CD Player has an Automatic Changer with 3 disc trays. You can use Continuous, Random, Program or Repeat Play for the discs in DISC-1, DISC-2 and DISC-3. Repeat Play can repeat all the tracks on all the CD's, the tracks on one of the CD's or one track on one CD. There is also the Tray Lock function, which safely keeps discs in the trays.

Here are the basic things you need to know to play a CD and locate the different selections on it. Each selection is called a track, so when we are talking about locating a track, we are also talking about how you find a certain song or performance.

The Quickest Way To Start a CD Is With the One Touch Operation

■ Press the CD ▷/II button (or the ►/II button on the Remote Control).

For Normal Play (Play mode indicator is not lit):

- If there is a CD in the disc tray for the selected disc number, the power is automatically turned on and the CD is played from the first track.
- If there is no CD in the disc tray for the selected disc number, the power is automatically turned on and "NO DISC" appears on the display. The CD Player is in stop mode.

For Continuous Play or Random Play in Display mode (CONT. or RANDOM indicators are lit):

- If there is a CD in the disc tray for the selected disc number, the power is automatically turned on and the CD is played continuously from the first track or the tracks are played in random order.
- If there is no CD in the disc tray for the selected disc number, the power is automatically turned on and other tray containing a CD is selected and is played continuously from the first track or the tracks are played in random order.
- If there are no CDs in CD player, the power is automatically turned on and "NO DISC" appears on the display in Normal Play mode. The CD Player is in stop mode.

■ Press a DISC button (1 to 3).

- If there is a CD in the disc tray for the selected disc number, the power is automatically turned on and playback starts from the selected CD.
- If there are no CDs in CD Player, the power is automatically turned on and "NO DISC" appears on the display in Normal Play mode. The CD Player is set to stop mode.

■ Press the ≜ button.

- The power turns on, and the tray opens automatically.

To Insert Discs

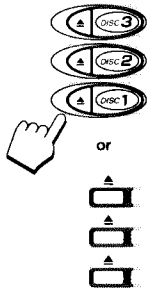

1. Press the ≜ button on the left of the Disc button you want to insert the disc into.

The disc tray slides out automatically.

2. Place a CD, with its label side up, onto the tray.

ATTENTION: *To avoid malfunctions when you play a CD, please set the CD in the right place at the centre of the tray.*

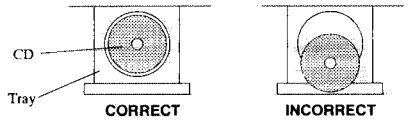

3. Press the ≜ button to close the tray.

4. Repeat steps 1 to 3 to insert other discs into other trays.

- To continue putting discs into other trays, even if a tray is open, by pressing the ≜ button of another disc tray, the open tray will close automatically, and the new disc tray will slide out.

■ To put an 8 cm CD into a tray, insert it so that it is aligned with the groove in the tray's centre.
■ If a tray is open when the System switches to Standby mode, the tray is closed automatically.
■ If the CD cannot be read correctly (due to scratches etc.), "00:00000" appears on the display.

Basics of Using the CD Player — Normal Play

To Play a Disc

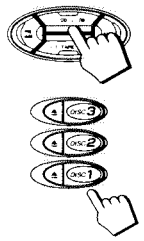

1. Prepare the discs.

2. Press the CD ▷/II or DISC button (1-3) of the disc you want to play.

When using the Remote Control, press the ►/II button or the DISC (1 to 3) buttons.
The first track of the selected disc will begin playing.
The CD Player automatically stops when the playback finishes the last track of the CD.

- If these buttons are pressed while the tray is open, the tray is automatically closed and playback starts.

To stop play the disc, press the ■ button (or the ■/CLEAR button on the Remote Control).
To stop play and remove the disc, press the ≜ button for the disc being played.
To pause, press the CD ▷/II button (or the ►/II button on the Remote Control). The Disc display will blink.
To cancel pause, press the CD ▷/II button again (or press the ►/II button on the Remote Control). Play continues from the point where it was paused.

To Select a Disc, Track Or Passage Within a Track

1. Press the DISC button (1-3) for the disc tray containing the track you want to listen to.

- Example: for the third disc, press 3.

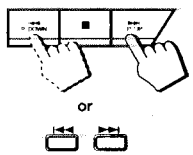

2. Press the ⏮ P.DOWN or ⏭ P.UP button to select the track.

The selected track starts playing.
Each time you briefly press and release the ⏮ P.DOWN or ⏭ P.UP button, the track changes by one.

- Press and release the ⏭ P.UP button to go ahead one track at a time.
- Press and release the ⏮ P.DOWN button to go back one track at a time.

Holding down the ⏮ P.DOWN or ⏭ P.UP button, during playback, will fast forward/backwards the CD so you can quickly find a particular passage in the selection you are listening to.

When using the Remote Control, press the ⏮ or ⏭ button.

Locating a Track With the Remote Control Directly

Using the number keys on the Remote Control allows you to go directly to the beginning of any track.

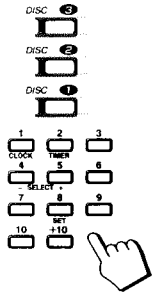

1. Press the DISC button (1-3) for the disc tray containing the track you want to listen to.

- Example: for the third disc, press 3.

2. Enter the number of the track you want to listen to with the number keys.

The selected track starts playing.

- Example: for track 5, press 5. For track 15, press +10 then 5. For track 20, press +10, then 10. For track 32, press +10 three times, then 2.

To Change Discs While Playing

You can replace a CD in a tray not being used, while another CD is playing.

1. Press the ≜ button of the tray not being used.

The tray opens.

2. Replace the disc in the tray.

3. Press the ≜ button to close the tray.

Continuous Play

This function plays the disc in the Unit continuously.

1. Prepare the discs.

2. Select Continuous mode.

On the Unit
Press the CONTINUE button.
The playback automatically starts from the selected CD.
- "CONT." on the Play mode indicator lights up.

You can press the CONTINUE button while a CD is playing to switch to Continuous mode.

On the Remote Control

1. Press the PLAY MODE button while the CD Player is stopped, to select "CONTINUE".
- "CONT." lights in the Play mode indicator. The display changes with each press of the PLAY MODE button as shown below.

→ **PROGRAM** → **RANDOM** → **CONTINUE** → No display → (back to the beginning)

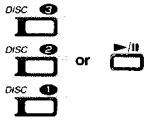

2. Press the DISC button (1 to 3) or ►/II button.
Playback starts from the selected CD.

Playing order of the CDs
The selected CDs are played continuously in the following order.
→ **DISC 1** → **DISC 2** → **DISC 3** → (back to the beginning)

To cancel Continuous play, press the CONTINUE button again. The "CONT." indicator on the display goes out and Normal Play is resumed. When using the Remote Control, press the PLAY MODE button while the CD Player is stopped to select a different Play mode. The "CONT." indicator goes out and the next Play mode is selected.

Programming the Playing Order of the Tracks

You can change the order in which the discs and tracks play, and select only the discs and tracks you want from among those loaded in the CD Player.
- You can program up to 20 steps in any desired order from among the discs in the player.
- You can only make a program when the CD Player is stopped.
- Use the Remote Control.

1. Press the PLAY MODE button to select "PROGRAM".
The display changes with each press of the PLAY MODE button as shown below.

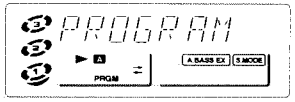

→ **PROGRAM** → **RANDOM** → **CONTINUE** → No display → (back to the beginning)

- The "PRGM" play mode indicator light up.
- If a program is already in progress, the last step of the program is displayed.

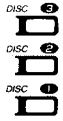

2. Select a disc with the DISC buttons (1-3).
The display changes to the Program Entry display.

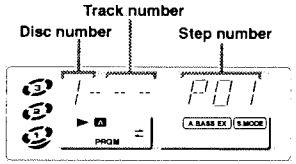

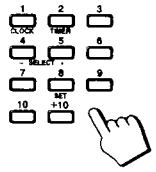

3. Press the number keys (1 to 10 and +10) to select the track to program.
- Example: for track 5, press 5. For track 15, press +10 then 5. For track 20, press +10 then 10.

4. Repeat steps 1 to 3 to select the other tracks for the program.

5. Press the ►/II button.
The Unit plays the tracks in the order you have programmed them.

- If you try to program a disc tray that is empty, or a track number that does not exist on a disc (for example, selecting track 14 on a disc that only has 12 tracks), the selected disc or track are skipped when the program is played.
- You can skip to a particular program step by pressing the ⏮ or ⏭ button during program play.
- To play the programmed tracks over and over, press the REPEAT button . The Repeat mode indicators light up in sequence with each press of the REPEAT button.

To stop playing, press the ■ button (or the ■/CLEAR button on the Remote Control) once.
To delete all the tracks in a program, press the ■ button on the Unit or the ■/CLEAR button on the Remote Control while the CD Player is stopped. The program is deleted and the "PRGM" play mode indicator goes out and Normal Play is resumed.
To cancel program play, press the PLAY MODE button on the Remote Control while the CD Player is stopped to select a different Play mode. The "PRGM" indicator goes out and the next Play mode is selected.

Note: If you press the CONTINUE or RANDOM button on the unit while a program is playing, the play mode changes to that mode.

Random Play

The tracks will play in no special order when you use this mode.

On the Unit
Press the RANDOM button.
The playback automatically starts from the selected CD.
- "RANDOM" on the Play mode indicator lights up.

You can press the RANDOM button while a CD is playing to switch to Random play mode.

On the Remote Control

1. Press the PLAY MODE button while the CD Player is stopped, to select "RANDOM".
- "RANDOM" lights in the Play mode indicator.
The display changes with each press of the PLAY MODE button as shown below.

→ **PROGRAM** → **RANDOM** → **CONTINUE** → No display → (back to the beginning)

2. Press the ►/II button.
Playback starts from the selected CD.

Note: Random Play cannot be activated with the DISC button (1 to 3).

To skip to the next track, press the ⏭ button during playback. The next track is jumped to with each press of the button. Press the ⏮ button to jump to the start of the track being played.

- Press the REPEAT button before or during random play to instruct the System to continue with a different random track selection after the last selection is played.

To cancel random play, press the RANDOM button again. The "RANDOM" play mode indicator goes out and Normal Play is resumed. When using the Remote Control, press the PLAY MODE button while the CD Player is stopped to select a different Play mode. The "RANDOM" indicator goes out and the next Play mode is selected.

Repeating a Selection or the Discs

You can have all the discs, the program or the individual selection currently playing repeat as many times as you like.

Press the REPEAT button.
The display changes with each press of the button, as shown below.

→ ↻ → ↻ ALL → blank display → (back to the beginning)

↻ : Repeats one track on a CD.
↻ ALL: For Normal Play, repeats all the tracks on the current CD.
For Continuous Play or Random Play, repeats all the tracks on all the CDs in the CD Player.
For Program Play, repeats all the tracks in the program.

To exit Repeat Mode, press the REPEAT button until the Repeat mode indicator on the display goes out.

Tray Lock Function

In order to safely keep the discs in the CD Player, the three trays can be electronically locked in a single operation.
When the electronic lock is on, the trays cannot be opened even if the ≜ button is pressed.
This function can only be accessed by using the buttons on the Unit itself.

Locking the Electronic Lock

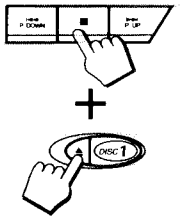

1. Put the System's power into STANDBY mode.

2. While pressing the ■ button, press the ≜ button for DISC 1's tray on the Unit.
"LOCK ON" appears on the display to let you know that the trays have been locked.

LOCK ON

When the CD Player trays are locked, pressing the ≜ buttons displays the message "LOCK ON" on the display and the trays do not open. Also, the ≜ button cannot be used to automatically turn on the power.

Unlocking the Electronic Lock

1. Put the System's power into STANDBY mode.

2. While pressing the ■ button, press the ≜ button for DISC 1's tray on the Unit.
When the unlock operation is done, "LOCK OFF" appears in the display to show that the lock has been taken off.

LOCK OFF

The trays can now be opened by pressing the ≜ buttons.
The ≜ button can also be used to automatically turn on the power.

Using the Cassette Deck (Listening to a Tape)

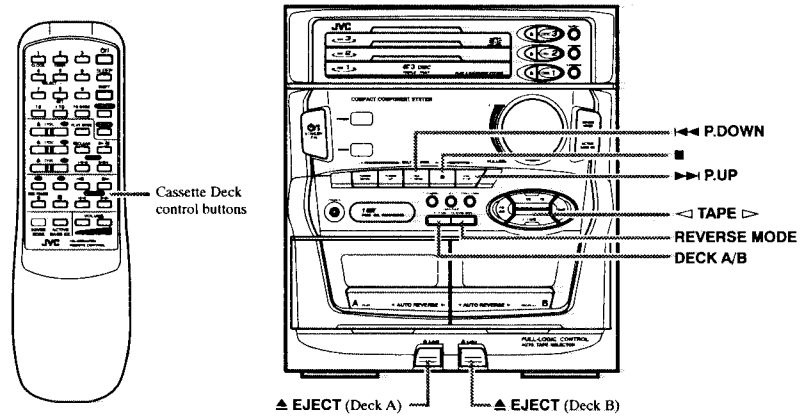

Display

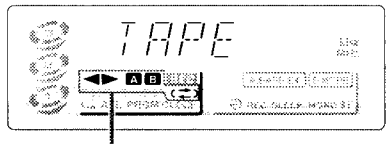

◄► : Tape Direction indicator
A B : DECK A, B indicator
(⇄) : Reverse Mode indicator

Tape Direction Indicator on the Display
The Tape Direction indicator tells you which direction the selected tape deck will use for playback.
During playback, the direction indicator blinks slowly.
During fast left or fast right, the indicator blinks quickly.
During Music Scan mode, the direction indicator alternates between blinking slowly and quickly repeatedly.

When the System is being used, the display shows other items as well. However, we have only shown the items described in this section.

The Cassette Deck allows you to play, record and dub audio tapes.
■ With Automatic Tape Detection, you can listen to type I or II tapes without changing any settings.

> The use of tapes longer than 120 minutes is not recommended, since characteristic deterioration may occur and these tapes easily jam in the pinch-rollers and the capstans.

One Touch Play

By pressing the ◁ TAPE ▷ button (or the ◄ or ► button on the Remote Control), the Unit will come on, "TAPE" appears in the display, and if a tape is in the deck, it will start to play. If no tape is loaded, the Unit will come on and wait for you to insert a tape, or select another function.

Regular Play

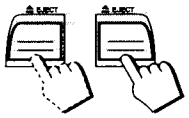

When the power is already on, you can use this basic procedure:

1. Press the ≜ EJECT button for the deck you want to use.

2. When the cassette holder opens, put the cassette in, with the exposed part of the tape down, toward the base of the System.
- If the cassette holder does not open, turn the Unit off, then back on and press the ≜ EJECT button again.

3. Close the holder gently.
When both Deck A and Deck B contain a tape, the last deck to have a tape inserted is selected.
To change the selected deck, press the DECK A/B button. When using the Remote Control, press the A or B button.

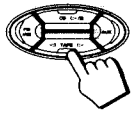

4. Press the ◁ TAPE ▷ button (or ◄ or ► button on the Remote Control).
The tape is played in the direction of the button pressed for the selected deck.
- The Cassette Deck automatically stops when one side of a tape has finished playing.

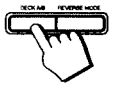

To stop playing, press the ■ button.
To remove the tape, stop the tape, and press the ⏏ EJECT button.
To change deck while playing a tape, press the ◁ TAPE ▷ button after pressing the DECK A/B button on the Unit or press the ◄ or ► button after pressing the A or B button on the Remote Control.

Fast Left And Fast Right

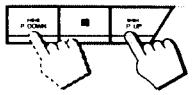

- While the tape is stopped, press the ⏮ P.DOWN button (or ◄◄ button on the Remote Control) and the tape will wind rapidly onto the left side of the cassette without playing.
- While the tape is stopped, press the ⏭ P.UP button (or ►► button on the Remote Control) and the tape will wind rapidly onto the right side of the cassette without playing.

Note: Deck A and Deck B cannot be used for playback at the same time.

Music Scan

To find the beginning of a music track during play, use the Music Scan function. Music Scan searches for blank portions that usually separate selections, then plays the next selection.

To Find the Beginning of the Current Selection

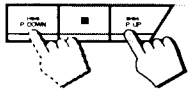

Press the ⏮ P.DOWN or ⏭ P.UP button (or the ◄◄ or ►► button on the Remote Control) during play.
- Make sure that you press the ⏮ P.DOWN or ⏭ P.UP button (or the ◄◄ or ►► button on the Remote Control) in the opposite direction to that in which the tape is playing. Searching stops at the beginning of the current selection, and the current selection starts automatically.

To Find the Beginning of the Next Selection

Press the ⏮ P.DOWN or ⏭ P.UP button (or the ◄◄ or ►► button on the Remote Control) during play.
- Make sure that you press the ⏮ P.DOWN or ⏭ P.UP button (or the ◄◄ or ►► button on the Remote Control) in the same direction as that in which the tape is playing. Searching stops at the beginning of the next selection, and the next selection starts automatically.

Music Scan works by detecting a 4-second long blank at the beginning of each selection, so it won't work well if your tape has:
- No blank at the beginning of a selection .
- Noise (often caused by much use or poor quality dubbing) which fills the blank with noise.
- Long, very soft passages or pauses in a selection. The scan will detect these as 4-second long blanks. If this happens, just scan again until you reach the selection you want.

Reverse Mode

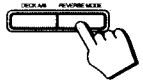

You can play both sides of a cassette, or play both the tapes in the two Cassette Decks continuously.
Press the REVERSE MODE button to switch to Reverse Mode.
The indicator changes with each press of the button as shown.

→ ⇄ → ⇄) → (⇄) → (back to the beginning)

⇄ : The Cassette Deck automatically stops after playing one side of the tape.
⇄) : The Cassette Deck automatically stops after playing both sides of the tape being played (or set to play).
(⇄) : After playing both sides of the tape being played (or set to play), the Unit always checks to see if a tape is in the other deck. If there is, it automatically starts playing that tape. This Continuous Play function works regardless of which deck starts first. The tapes are played continuously until the ■ button is pressed.

Using the Cassette Deck (Recording)

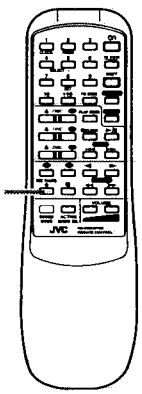

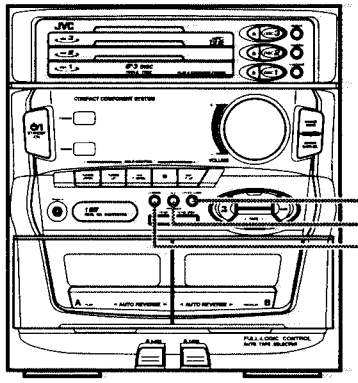

Display

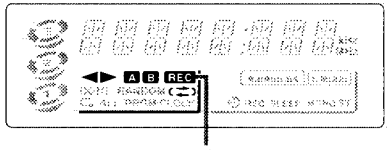

When the System is being used, the display shows other items as well.
However, we have only shown the items described in this section.

Recording onto a cassette from any of the sound sources is simple. Just place a tape in Deck B, have the source ready, make one or two settings, and you're ready to record. For each source the procedure is a little bit different and now we'll explain just what to do for each one. If you forget, just come back to the section which has the specific procedures you need. But first, here are a few things to make your recordings better.

Things To Know Before You Start Recording

- **It may be unlawful to record or play back copyrighted material without the consent of the copyright owner.**
- When you want to record onto both sides of a tape, you can set Reverse mode on to do so. However, recording automatically stops after recording in the ◄ direction in Reverse mode. Therefore, make sure that the tape direction is ► when recording with Reverse mode on.
- The recording level, which is the volume at which the new tape is being made, is automatically set correctly, so it is not affected by the VOLUME control on the System. Thus, during recording you can adjust the sound you are actually listening to without affecting the recording level.

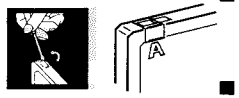

- Two small tabs on the back of the cassette tape, one for side A and one for side B, can be removed to prevent accidental erasure or re-recording. To record on a cassette with the tabs removed, you must cover the holes with adhesive tape first.
However, when a type II tape is used, only cover part of the hole as shown, since the other part of the hole is used to detect the tape type.
- When recording, you can hear Sound Mode effects through the speakers or headphones. However, the sound is recorded without Sound Mode effects.
- Type I and Type II tapes can be used for recording.

Note: At the start and end of cassette tapes, there is leader tape which cannot be recorded onto. Depending on the recording source, the first part of the recording may be missing because of the leader. When recording CDs or radio broadcasts, to get the beginning of the recording on the tape, first wind on the leader before beginning recording.

CAUTION: If recordings you have made have excessive noise or static, the Unit may be too close to a TV which was on during the recording. Either turn off the TV or increase the distance between the TV and the System.

Standard Recording

This is the basic method for recording any source. The System also has special ways for recording CD to tape, and tape to tape, which save you time and effort, as well as give you some special effects. However, when you need to add a selection to a tape you have made, or are combining selections from several sources on one tape, use the method described below; just substitute the source you want into this procedure, such as a tape in Deck A, a CD, or the Tuner. You can also record from auxiliary source with this procedure.

To Record Any Sound Source To Tape

Follow these steps to record from any sound source onto a tape in Deck B.

Using the Unit

1. Insert a blank or erasable tape into Deck B.

2. Press the REVERSE MODE button if you want to record on both sides of the tape.
Press the button until the "⇄" or "⟲⇄" indicator is lit.
- When using Reverse Mode, insert the tape so that it will be recorded in the forwards ► direction.

3. Check the recording direction for the tape.
Check that the Tape Direction indicator is the same as that for the tape in the tape deck. If the directions are different, press the ■ button after pressing the ◁ TAPE ▷ button to set the tape direction.
- When using Reverse Mode to record both sides of a tape, check that the Tape Direction indicator is in the forwards ► direction. If the direction indicator is not in the forwards ► direction, press the ◁ TAPE ▷ button then press the ■ button.

4. Prepare the source, by, for example, tuning in a radio station, loading CDs, or turning on connected equipment.

5. Press the REC START/STOP button.
The "REC" indicator light comes on and the System begins recording.

Using the Remote Control

1. Insert a blank or erasable tape into Deck B.

2. Press the REC PAUSE button.
The "REC" indicator blinks.

3. Press the REVERSE MODE button on the Unit if you want to record on both sides of the tape.
Press the button until the "⇄" or "⟲⇄" indicator is lit.
- When using Reverse Mode, insert the tape so that it will be recorded in the forwards ► direction.

4. Prepare the source by, for example, tuning in a radio station, loading CDs, or turning on connected equipment.

5. Press the ◄ or ► button.
Recording starts in the direction of the button pressed.
- When using Reverse Mode to record both sides of a tape, press the ► button.

Notes for using Reverse Mode for recording

When recording in Reverse Mode, the System automatically stops when it reaches the end of the reverse ◄ direction. To record on both sides of a tape, make sure that the recording direction for the tape inserted into Deck B is forwards ►, and that the Tape Direction indicator is also forwards ►, before you start recording.

To Pause at Any Time During the Recording Process

Press the REC PAUSE button on the Remote Control. Then press either the ◄ or ► button on the Remote Control or REC START/STOP button on the Unit to restart recording.

To Stop at Any Time During the Recording Process

Press the REC START/STOP button on the Unit again, or press the ■ button.

Recording AM (MW/LW) station to tape

When recording an AM (MW/LW) broadcast, beats may be produced which are not heard when listening to the broadcast. In this case, press the CONTINUE button on the CD Player to eliminate the beats.

1. Set to AM (MW/LW) station and start recording.
2. Press the CONTINUE button to eliminate the beats.
   Each time you press the button, the display changes as shown below:
   → **CUT 2** → **CUT 3** → **CUT 4** → **CUT 1** → (back to the beginning)

CD Direct Recording

Everything on the CD goes onto the tape in the order it is on the CD, or according to the order you have set in a program.

1. Prepare CDs. (See page 13.)
Check that the CD Player is not playing a CD.

2. Insert a cassette in Deck B to record on.
- When you want to record on both sides of a tape, press the REVERSE MODE to turn Reverse Mode on. Check that the recording direction for the tape and the Tape Direction indicator are correct. (See page 21 "Notes for using Reverse Mode for recording".)

3. Press the CD REC START button.
The "REC" indicator light comes on and the System begins recording.
If you make a recording with Reverse Mode on, the Unit will record the last song at the end of the first side at the beginning of the next side.

To stop at any time during the recording process, press the ■ button.

Note: When making SLEEP timer settings while doing CD Direct recording, set the time so that there is enough leeway to finish the recording before the power goes off. If the time is set to about the length of the CD, the power may go off before recording finishes.

> For CD Direct Recording using more than one disc, use a blank tape, If you use a prerecorded tape, prerecorded material may not be erased between newly-recorded tracks.

Tape to Tape Recording (Dubbing)

Recording from one tape to another is called dubbing.
You can dub tapes simply, with just a single button.

- ■ When dubbing tapes, make sure that the playback direction of Deck A and Deck B are the same.
- ■ When you want to record both sides of a tape, press the REVERSE MODE button to turn Reverse mode on.
- ■ It is preferable that the type of tape (Type I or Type II) you record from be the same as the type you record onto.

How to Use the DUBBING Button

1. Insert the source cassette you want to copy from into Deck A for playback.
Insert the cassette so that it will be played in the forwards ► direction.

2. Insert the blank or erasable cassette you want to copy onto in to Deck B for recording.
Insert the cassette so that it will be recorded in the forwards ► direction.

3. Press the DUBBING button.
Deck A and Deck B will start simultaneously.

To stop dubbing, press the ■ button or REC START/STOP button.

■ When doing dubbing with the DUBBING button, you can hear Sound Mode effects through the speakers or headphones. However, the sound is dubbed without Sound Mode effects.

Using the Timer

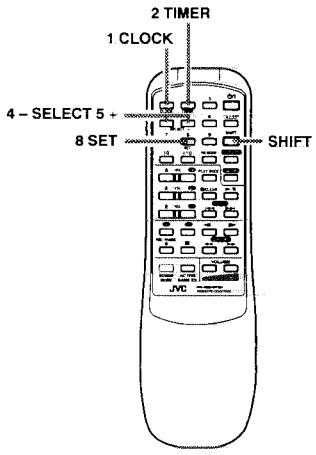

Display

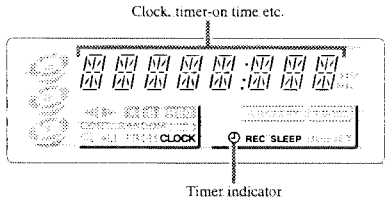

When the System is being used, the display shows other items as well. However, we have only shown the items described in this section.

The timers lets you control listening and recording functions automatically.
Use the Remote Control to set the clock and timers.

Setting the Clock

The timers depend on the clock: the clock must be right for the timers to work as you expect.
You can set the clock whether the Unit is on or off.
Note that the clock must be set, otherwise the timers cannot be set.

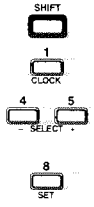

1. Press the SHIFT button.

2. Press the 1 CLOCK button.
The "CLOCK" indicator on the display lights up and the clock time blinks.

3. Press the SELECT 5 + or 4 – button to set the time.
Pressing the 5 + button increases the time and pressing 4 – decreases the time. Pressing the button continuously advances or decreases the time in 10 minute intervals.

4. Press the 8 SET button.
The blinking time display changes from a blinking display to a steady display and the clock timer starts from 0 seconds.

CAUTION: If there is a power failure, the clock loses its setting. The display shows "0:00", and the clock must be reset.

Setting the Timer

■ You can set the Timer whether the Unit is on or off.

Procedure For Setting the Timer

1. Press the SHIFT button.

2. Press the 2 TIMER button.
The Timer indicator on the display lights up and the blinking "TIMER ON" changes to the On Time setting display.

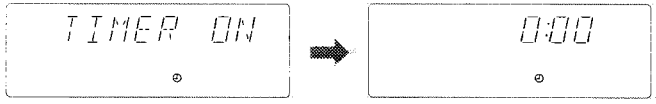

3. Set the time you want the Unit to come on.
Press the SELECT 5 + or 4 – button to set the On Time.

4. Press the 8 SET button.
"TIMER OFF" blinks on the display, and the display changes to the Off Time setting display.

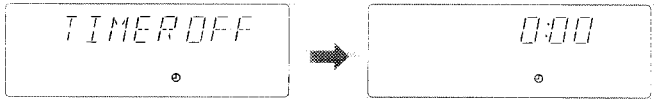

5. Set the time you want the Unit to be turned off.
Press the SELECT 5 + or 4 – button to set the Off Time.

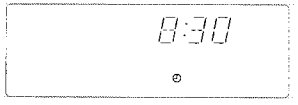

6. Press the 8 SET button.
The name of the source blinks in the display.

7. Press the SELECT 5 + or 4 – button to select the source.
The display changes with each press of the button as shown.

→TUNER →TUNER REC →CD →TAPE →

TUNER:	Selects the last station you were listening to.
TUNER REC:	Records the last station you were listening to.
CD:	Plays the last CD you were listening to.
TAPE:	Plays the last tape you were listening to.

- In the source "TUNER", "CD", or "TAPE", the timer acts as a Daily timer. Once the Daily timer has been set, it will be activated at the same time every day until the setting is turned off.
  In the source "TUNER REC", the timer acts as a Once timer. After the Once timer has been performed, the details of the setting remain stored but the Timer status is set to off.

8. Press the 8 SET button.
The volume level blinks on the display.

9. Press the SELECT 5 + or 4 – button to set the volume level.

10. Press the 8 SET button.
The display returns to the display before you set the timer.

Before Turning the Unit Off

- Check that the selected source is ready.
- If you will be recording a source while you are out, set the volume to 0.

To turn the Timer off, press the 2 TIMER button while pressing the SHIFT button. The Timer indicator on the display goes out.

Setting the SLEEP Timer

Use the Sleep Timer to turn the Unit off after a certain number of minutes when it is playing. By setting this timer, you can fall asleep to music and know your Unit will turn off by itself rather than play all night.

- You can only set the Sleep Timer when the Unit is on and a source is playing.

To set the SLEEP Timer, follow this procedure:

1. With the System on and a source playing, press the SLEEP button on the Remote Control.

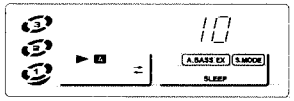

2. Set the length of time you want the source to play before shutting off.

- Each time you press this button, it changes the number of minutes shown on the display in this sequence:

→ 10 → 20 → 30 → 60 → 90 → 120 → Cancelled → (back to the beginning)

When the number of minutes you want shows on the display, just wait 5 seconds until the number of minutes stops blinking, and is lighted steadily.
The Unit is now set to turn off after the number of minutes you set.

To Change the SLEEP Timer Setting

Press the SLEEP button until the number of minutes you want appears on the display.

To Cancel the SLEEP Timer Setting

Press the SLEEP button until the "SLEEP" indicator goes off on the display.
Turning off the Unit also cancels the SLEEP Timer.

Care And Maintenance

Compact Discs

Handle your compact discs, cassette tapes, and Cassette Deck carefully, and they will last a long time.

- Remove the CD from the case by holding it at the edges while pressing the centre hole lightly.
- Do not touch the shiny surface of the CD, or bend the CD.

- Put the CD back in its case after use to prevent warping.
- Be careful not to scratch the surface of the CD when placing it back in the case.
- Avoid exposure to direct sunlight, temperature extremes, and moisture.

- A dirty CD may not play correctly. If a CD does become dirty, wipe it with a soft cloth in a straight line from centre to edge.

CAUTION: Do not use any solvent (for example, conventional record cleaner, spray thinner, benzine, etc.) to clean a CD.

Moisture Condensation

Moisture may condense on the lens inside the Unit in the following cases:

- After starting the heating in the room.
- In a damp room.
- If the unit is brought directly from a cold to a warm place.

Should this occur, the Unit may malfunction. In this case, leave the unit turned on for a few hours until the moisture evaporates, unplug the AC power cord, and then plug it in again.

General Notes

In general, you will have the best performance by keeping your tapes, CDs, and the mechanism clean.

- Store tapes and CDs in their cases, and keep them in cabinets or on shelves.
- Keep the Cassette Deck's tape doors and the CD trays closed when not in use.

Cassette Tapes

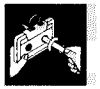

- If the tape is loose in its cassette, take up the slack by inserting a pencil in one of the reels and rotating.
- If the tape is loose, it may get stretched, cut, or caught in the cassette.

- Do not touch the tape surface.

- Do not store the tape:
  - In dusty places
  - In direct sunlight or heat
  - In moist areas
  - On a TV or speaker
  - Near a magnet

Cassette Deck

- If the heads, capstans, and pinch-rollers of the Cassette Deck become dirty, the following will occur:
  - Loss of sound quality
  - Discontinuous sound
  - Fading
  - Incomplete erasure
  - Difficulty recording
- Clean the heads, capstans, and pinch-rollers using a cotton swab moistened with alcohol.

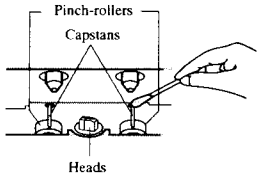

- If the heads become magnetized, the Unit will produce noise or lose high frequencies.
- To demagnetize the heads, turn off the Unit, and use a head demagnetizer (available at electronics and record shops).

Troubleshooting

- If you are having a problem with your System, check this list for a possible solution before calling for service.
- If you cannot solve the problem from the hints given here, or the Unit has been physically damaged, call a qualified person, such as your dealer, for service.

Symptom	Possible Cause	Action
No sound is heard.	Connections are incorrect, or loose.	Check all connections and make corrections. (See pages 4 - 5.)
Unable to record.	Cassette record protect tabs are removed.	Cover holes on back edge of cassette with tape.
Poor radio reception	• The antenna is disconnected. • The AM Loop Antenna is too close to the Unit. • The FM Wire Antenna is not properly extended and positioned.	• Reconnect the antenna securely. • Change the position and direction of the AM Loop Antenna. • Extend FM Wire Antenna to the best reception position.
The CD skips.	The CD is dirty or scratched.	Clean or replace the CD.
Unable to operate the Remote Control.	• The path between the Remote Control and the sensor on the Unit is blocked. • The batteries have lost their charge.	• Remove the obstruction. • Replace the batteries.
The CD tray cannot be opened.	The main AC power cord is not plugged in.	Plug in the AC power plug.
The CD does not play.	The CD is upside down.	Put the CD in with the label side up.
Operations are disabled.	The built-in microprocessor has malfunctioned due to external electrical interference.	Unplug the Unit then plug it back in.
The cassette door cannot be opened.	During tape playing, the power cord was unplugged.	Plug in the power cord, press the ⏻/I button, and then press the ⏏ EJECT button.

Specifications

Amplifier

CA-D401T

Output Power (IEC 268-3/DIN) 27 watts per channel, min. RMS, both channels driven into 6 ohms at 1 kHz with no more than 0.9% total harmonic distortion.

CA-D301T

Output Power (IEC 268-3/DIN) 12 watts per channel, min. RMS, both channels driven into 4 ohms at 1 kHz with no more than 0.9% total harmonic distortion.

Input Sensitivity/Impedance (1 kHz)
AUX 300 mV/50 kohms

CA-D401T

Speaker terminals 6 - 16 ohms

CA-D301T

Speaker terminals Minimum 4 ohms

Cassette Deck

Frequency Response
Type II (CrO_2) : 50 - 14,000 Hz
Type I (NORMAL) : 50 - 14,000 Hz
Wow And Flutter 0.15% (WRMS)

CD Automatic Changer

CD Capacity 3 discs
Dynamic Range 85 dB
Signal-To-Noise Ratio 90 dB
Wow And Flutter Unmeasurable

Tuner

FM Tuner
Tuning Range 87.5 - 108.0 MHz
AM Tuner
Tuning Range
MW 522 - 1,629 kHz
LW 144 - 288 kHz

CA-D401T

Dimensions 265 x 295 x 339 mm (W/H/D)
(10-7/16 x 11-5/8 x 13-3/8 inches)
Mass 7.1 kg (15.7 lbs)

CA-D301T

Dimensions 265 x 295 x 339 mm (W/H/D)
(10-7/16 x 11-5/8 x 13-3/8 inches)
Mass 6.7 kg (14.8 lbs)

Accessories

AM (MW/LW) Loop Antenna (1)
Remote Control (1)
Batteries R6P (SUM-3)/AA (15F) (2)
FM Wire Antenna (1)

Power Specifications

CA-D401T

Power Requirements AC 230 V ∿, 50 Hz
Power Consumption 85 watts
12 watts (in standby mode)

CA-D301T

Power Requirements AC 230 V ∿, 50 Hz
Power Consumption 55 watts
12 watts (in standby mode)

Design and specifications are subject to change without notice.

4.Location of Main Parts

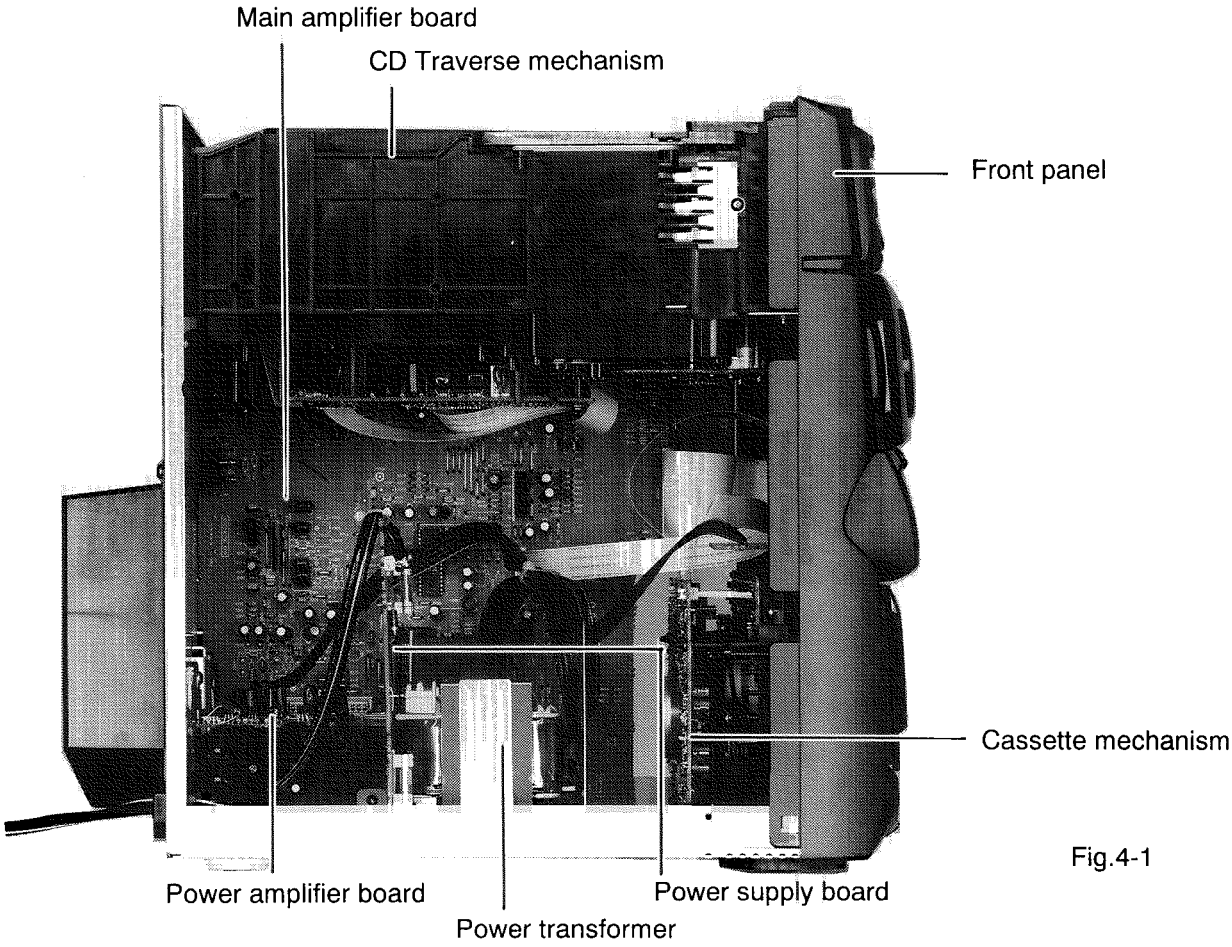

Fig.4-1

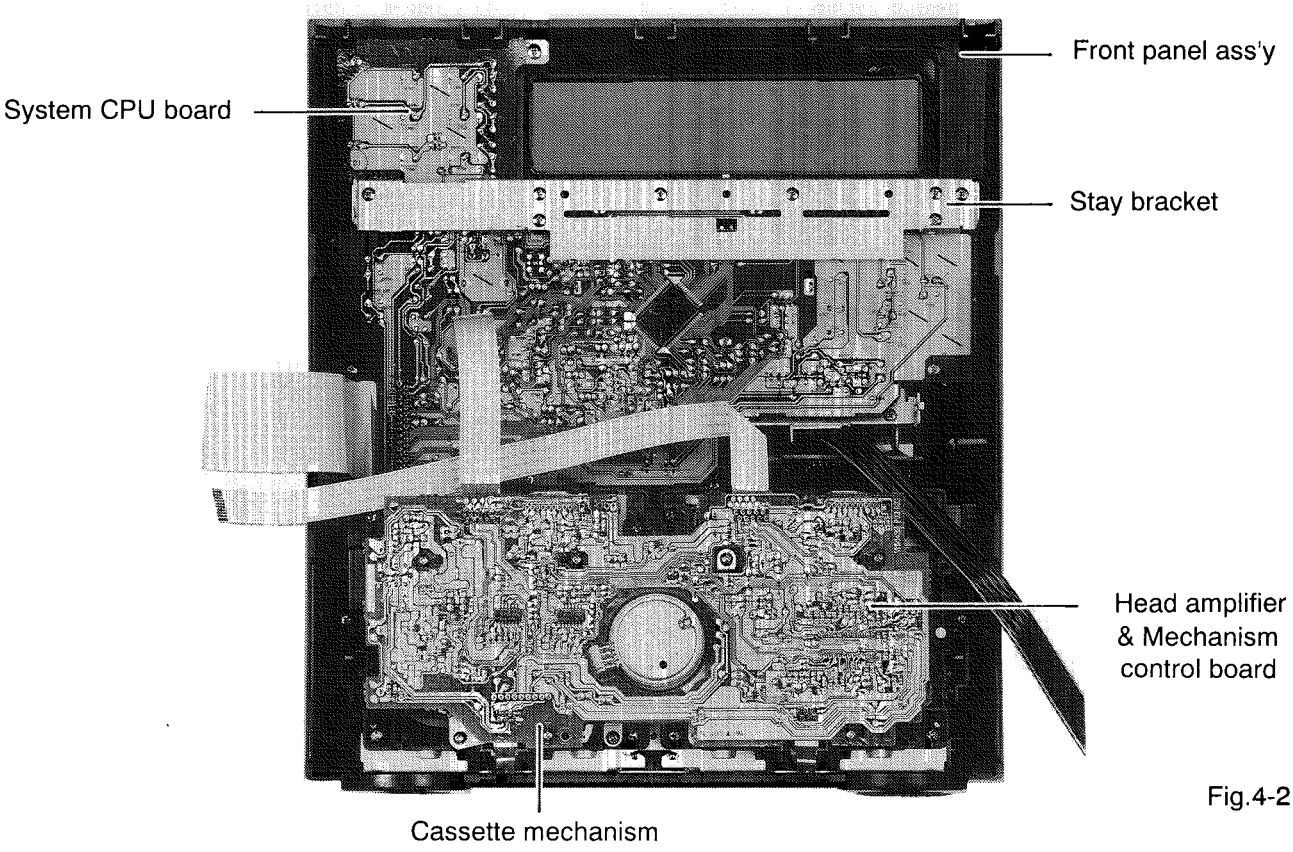

Fig.4-2

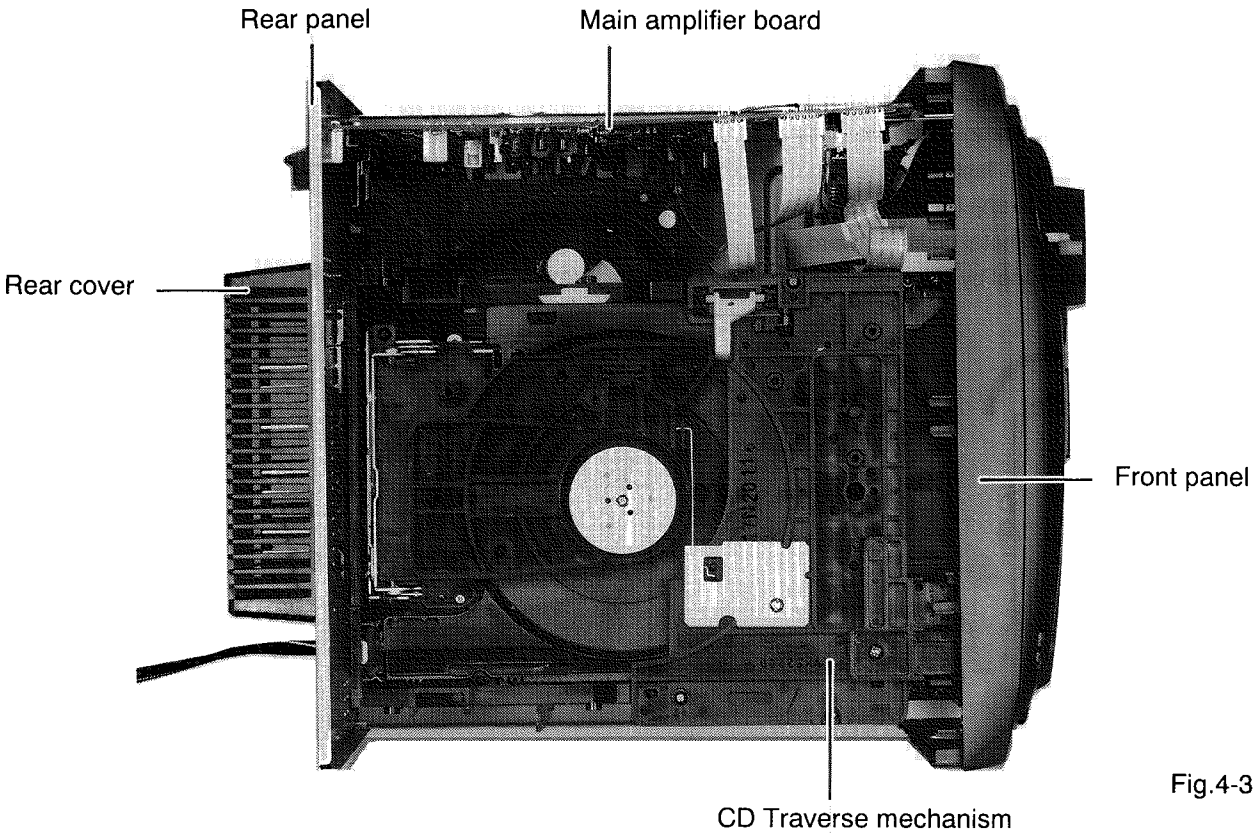
Rear panel
Main amplifier board
Rear cover
Front panel
CD Traverse mechanism

Fig.4-3

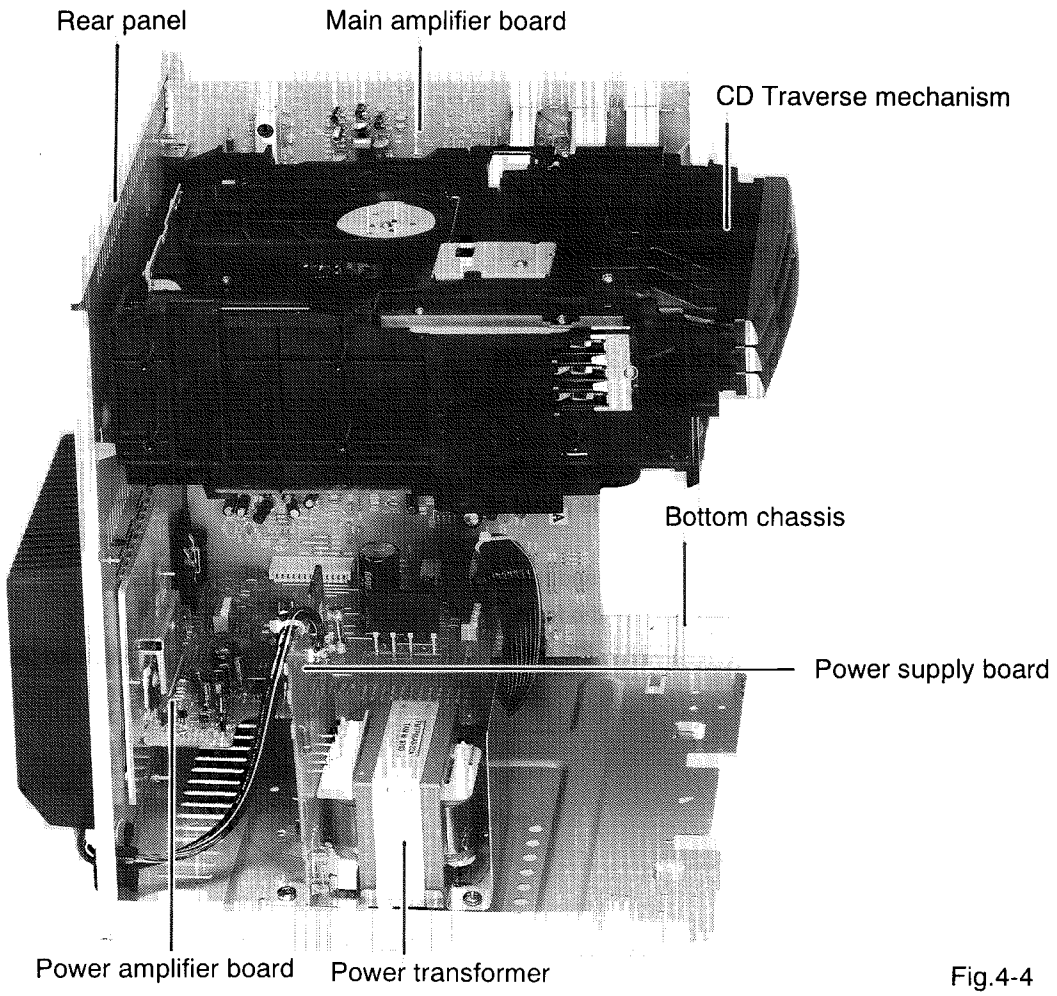
Rear panel
Main amplifier board
CD Traverse mechanism
Bottom chassis
Power supply board
Power amplifier board
Power transformer

Fig.4-4

5.Removal of Main Parts

■ Removal of the Metal Cover (See Figs. 5-1,5-2)

1. Remove the six screws ① fastening the metal cover to the rear panel of the main unit.(See Fig. 5-1)
2. Remove the two screws ② fastening the metal cover to the side panel of the main unit.(See Fig. 5-1)
3. Spread both sides of the metal cover outward and remove from the back panel by lifting upward.

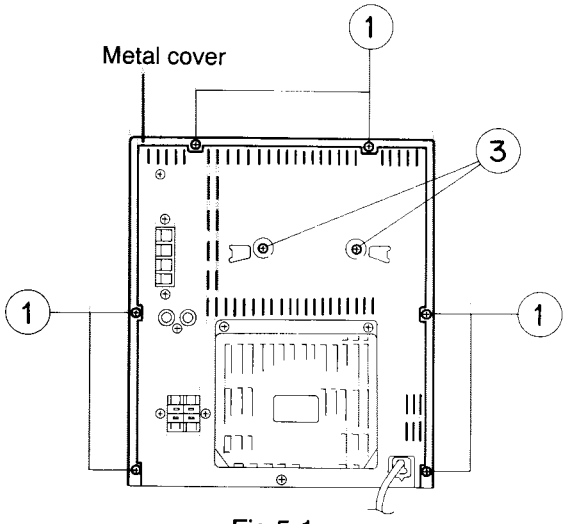

Fig.5-1

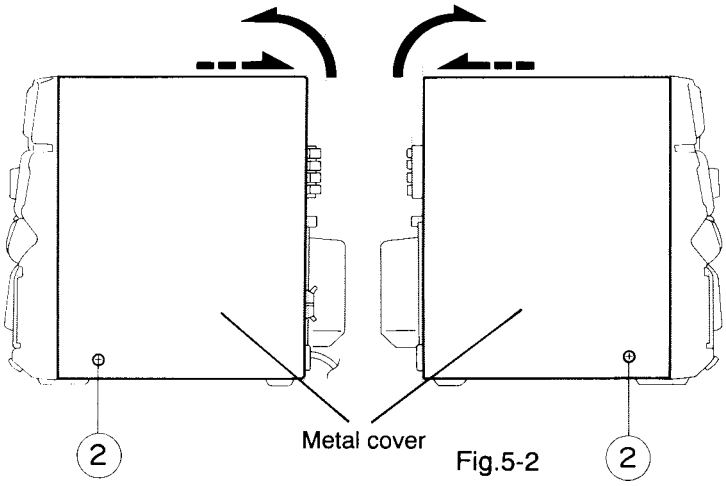

Fig.5-2

■ Removal of the CD Traverse Mechanism Assembly

(See Figs. 5-1～5-4)

1. Remove the metal cover.
2. Remove the two screws ② fastening the CD traverse mechanism assembly to the rear panel of the main unit. (See Fig. 5-1)
3. Remove the two screws ④ fastening the CD traverse mechanism assembly to the top panel of the main unit. (See Fig. 5-3)
4. Disconnect the card wires connected to the CD traverse mechanism assembly from connectors CN304, CN305 and CN306 on the main amplifier board on the right side of the main unit.(See Fig. 5-3)
5. Remove the plastic rivet ⓐ fastening the main amplifier board and front panel assembly to the left side panel of the main unit.(See Fig. 5-4)
6. Tilt the front panel assembly slightly forward and remove the CD traverse mechanism assembly from the front panel assembly by shifting in the direction of the arrow and lifting upward.(See Fig. 5-3)

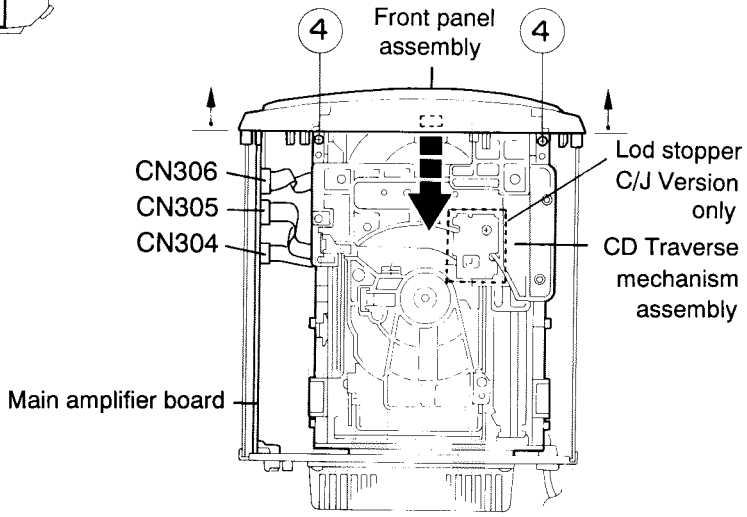

Fig.5-3

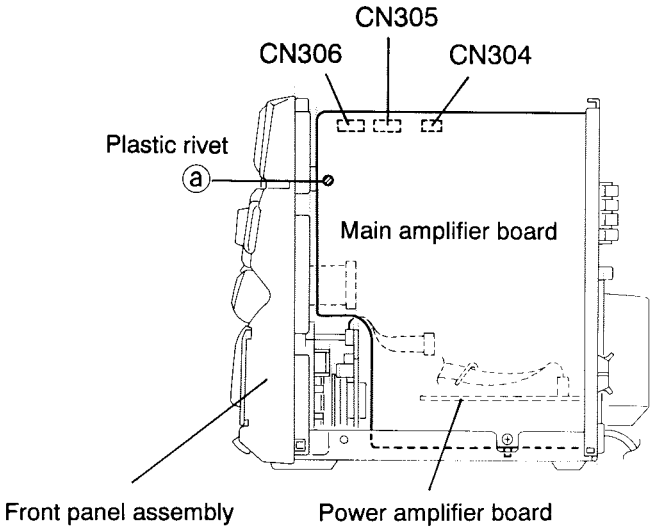

Fig.5-4

■Removal of the Front Panel Assembly

(See Figs. 5-5～5-9)

1. Remove the metal cover.
2. Remove the CD traverse mechanism assembly.
3. Remove the four screws ⑤ fastening the front panel assembly to the side of the main unit.(See Fig. 5-5)
4. Use a screwdriver, etc., to disengage clips ⓒ and ⓓ from the side panels of the main unit.(See Figs. 5-6, 5-7)
5. Disconnect the card wires connected to the front panel assembly from connectors CN302 and CN303 on the main amplifier board.(See Fig. 5-8)
6. Remove the wire clamp holding the parallel wires protruding from the front panel assembly and the parallel wires protruding from the power supply board.(See Figs. 5-8, 5-9)
7. Disconnect connector CN904 on the power amplifier board and then disconnect the parallel wires protruding from the front panel assembly.(See Figs. 5-8, 5-9)
8. Remove the front panel assembly.

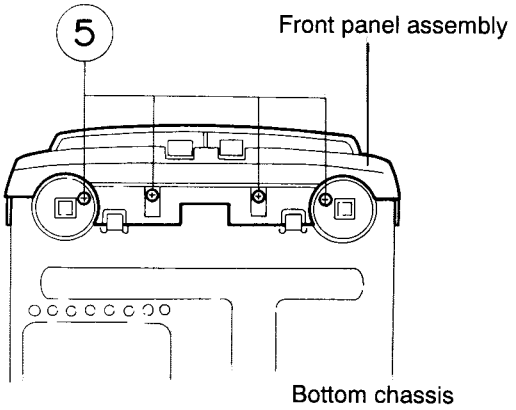

Fig.5-5

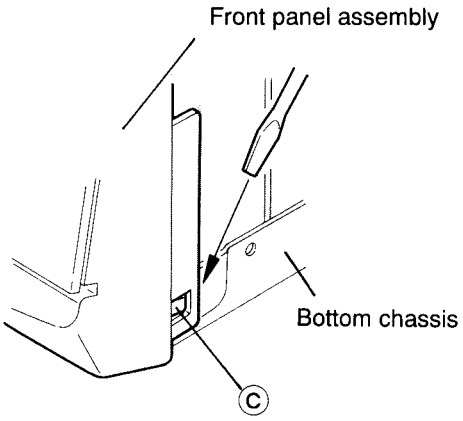

Fig.5-6

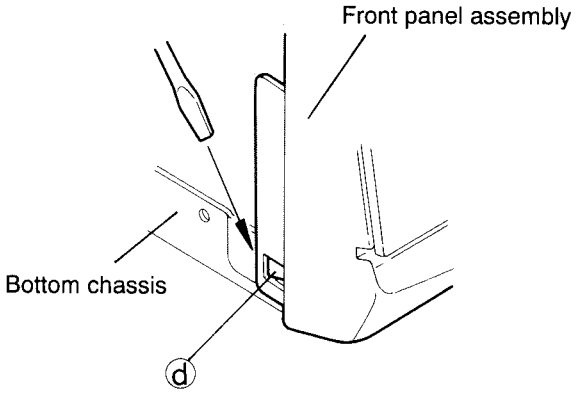

Fig.5-7

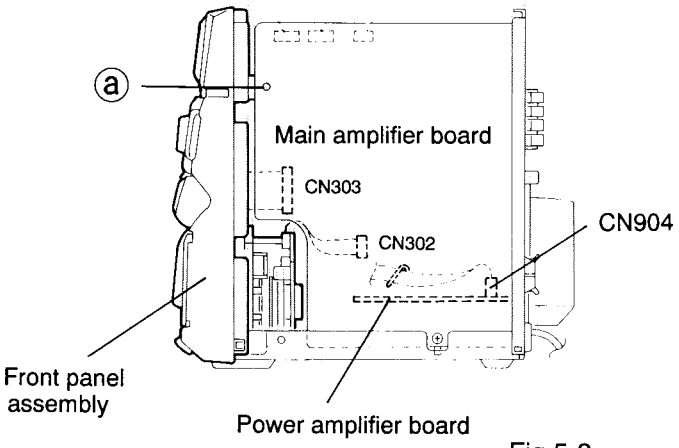

Fig.5-8

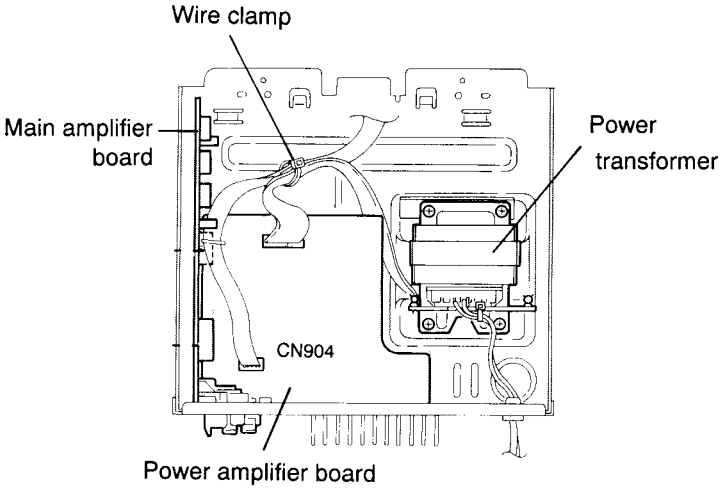

Fig.5-9

■ Removal of the Rear Panel Assembly

1. Remove the metal cover.
2. Remove the CD traverse mechanism assembly.
3. Remove the front panel assembly.
4. Remove the screw ⑥ fastening the main amplifier board and bottom chassis to the side panels of the main unit. (See Fig. 5-10)
5. Remove the screw ⑦ fastening the rear panel and bottom chassis to the rear panel of the main unit.(See Fig. 5-11)
6. Use a screwdriver, etc., to disengage the two engagements bottom chassis clips ⓔ and ⓕ from the bottom part of the side panels of the rear panel assembly.(See Figs. 5-12, 5-13)
7. Disconnect the parallel wires protruding from the power supply board from connector CN902 of the power amplifier board.(See Fig. 5-14)
8. Remove the rear panel assembly from the bottom chassis by disengaging the protrusion ⓖ of the main amplifier board from the cutout in the bottom chassis.(See Fig. 5-10)

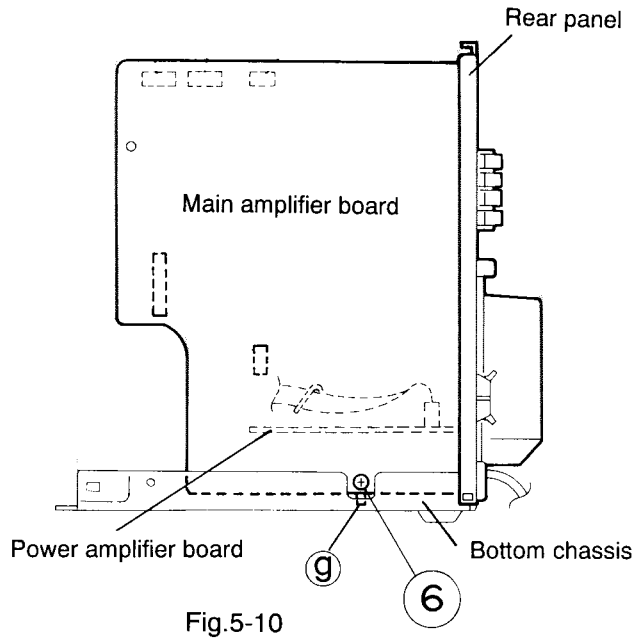

Fig.5-10

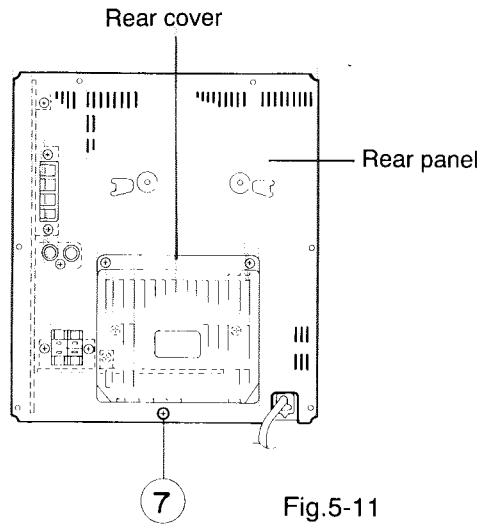

Fig.5-11

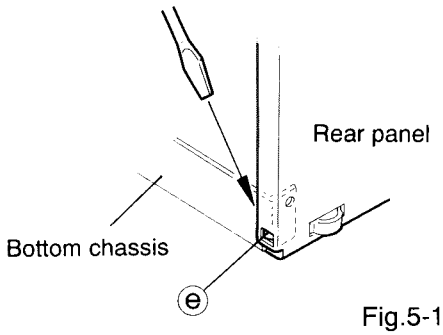

Fig.5-12

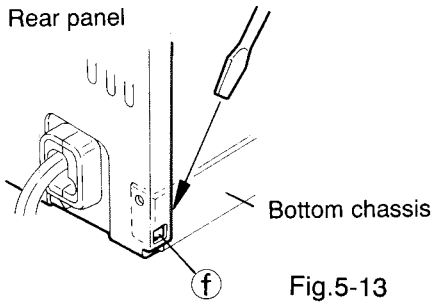

Fig.5-13

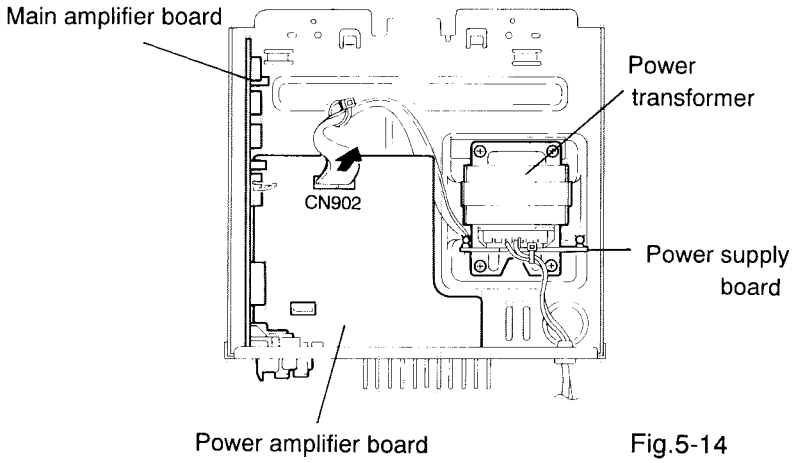

Fig.5-14

■ Removal of the Main Amplifier Board

1. Remove the metal cover.
2. Remove the CD traverse mechanism assembly.
3. Remove the front panel assembly.
4. Remove the rear panel assembly.
5. Remove the four screws ⑧ fastening the main amplifier board to the rear panel.(See Fig. 5-15)
6. Disconnect the main amplifier board connectors CN307 and CN308 from the power amplifier board.(See Fig. 5-16)

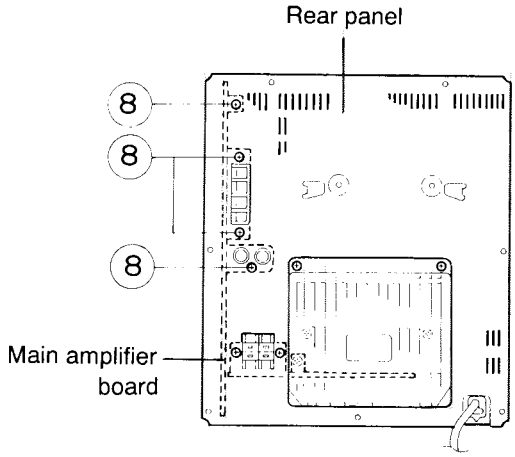

Fig.5-15

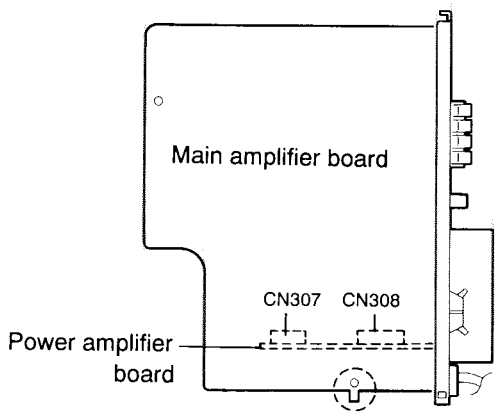

Fig.5-16

■ Removal of the Power Amplifier Board

1. Remove the metal cover.
2. Remove the CD traverse mechanism assembly.
3. Remove the front panel assembly.
4. Remove the rear panel assembly.
5. Remove the main amplifier board.
6. Remove the two screws ⑨ fastening the rear cover to the rear panel assembly and then remove the rear cover. (See Fig. 5-17)
7. Remove the five screws (⑩ x 3, ⑪ x 2) fastening the power amplifier board to the rear panel assembly.(See Fig. 5-17)
8. Remove the two screws ⑬ fastening the voltage select board to the rear panel assembly. (See Fig. 5-17a For U version only)

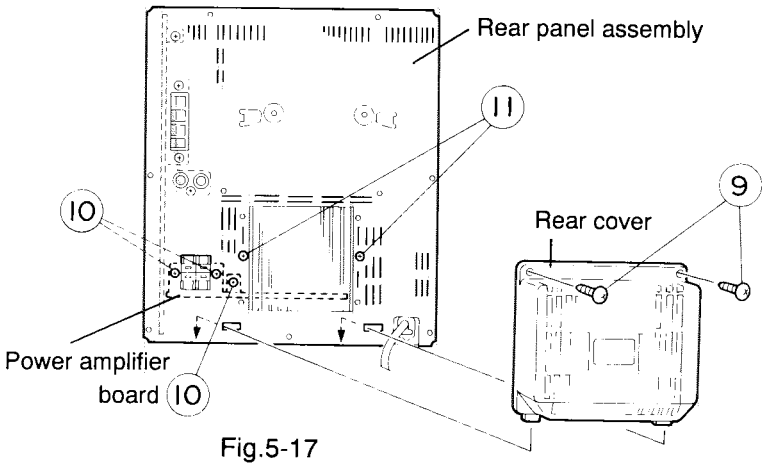

Fig.5-17

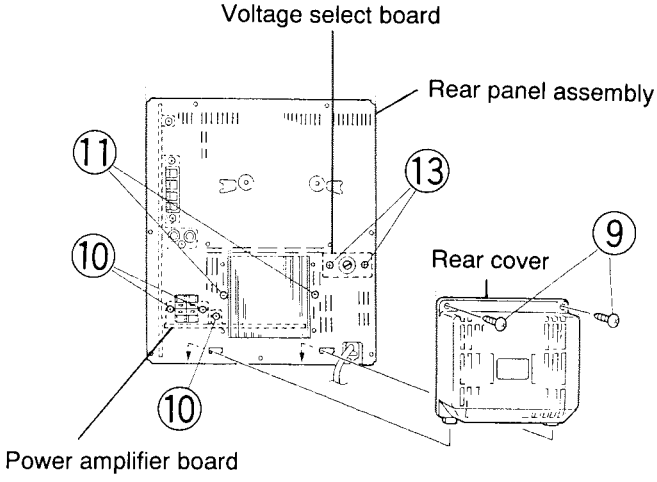

Fig. 5-17a (For U version only)

■ Removal of the Power Transformer

(See Figs. 5-18,5-19)

1. Remove the metal cover.
2. Remove the CD traverse mechanism assembly.
3. Remove the front panel assembly.
4. Remove the rear panel assembly.
5. Remove the main amplifier board.
6. Remove the power amplifier board.
7. Remove the four screws ⑫ fastening the power transformer.
8. Disconnect the power amplifier board connector CN902 and then disconnect the parallel wire.
9. Either unsolder the power cord from the power supply board terminals TB001 and TB002 or remove the cord clamp inserted into the bottom chassis and remove.

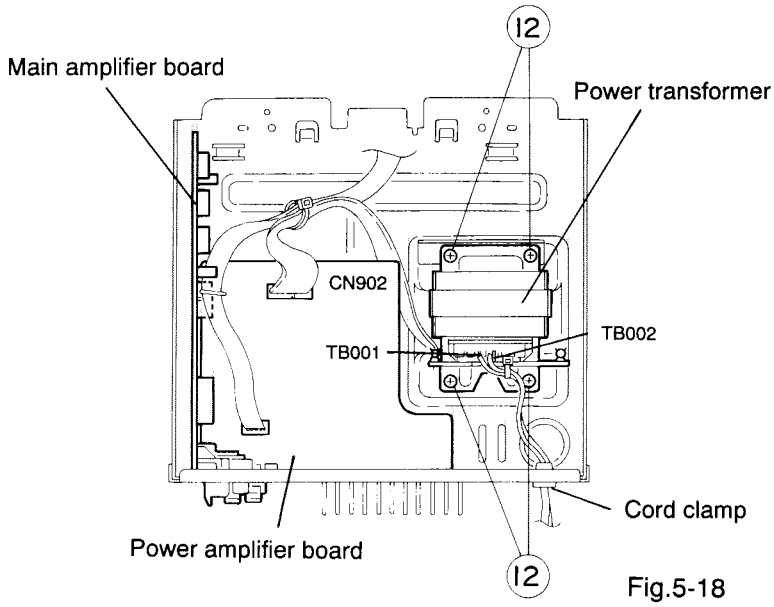

Fig.5-18

■ Removal of the Mic & Echo amplifier board

(See Fig. 5-A For A/U version only)

Remove the screw ⑭ fastening the Mic & Echo amplifier board inside the front panel assembly.

■ Removal of the Headphone & Mic jack board

(See Fig. 5-A)

Remove the two screws ⑮ fastening the headphone & Mic jack board assembly inside the front panel

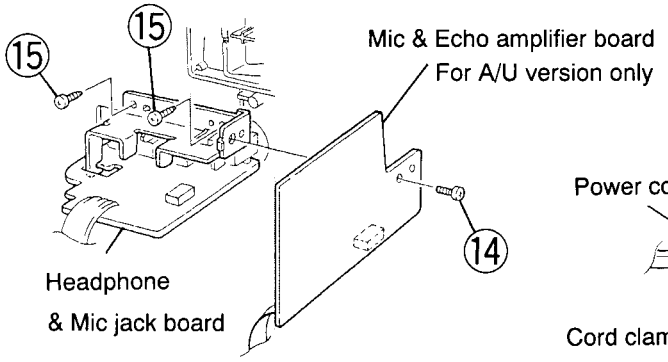

Fig.5-A

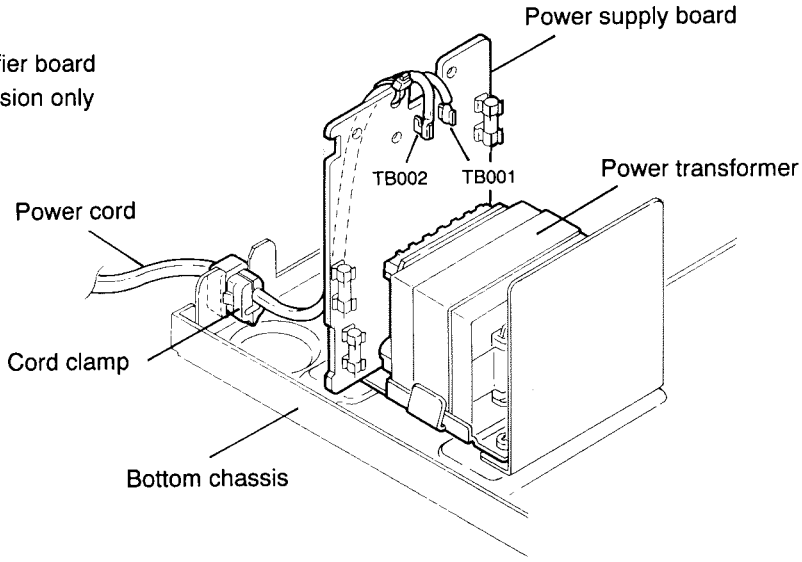

Fig.5-19

《Front Panel Assembly Sections》

■ Removal of the Front Panel

(See Figs. 5-20～5-23)

1. Remove the metal cover.
2. Remove the CD traverse mechanism assembly.
3. Remove the front panel assembly.
4. Remove the volume knob from the front of the front panel assembly.(See Fig. 5-20)
5. Remove the nut fastening the volume control from the front panel assembly.(See Fig. 5-20)
6. Remove the eight screws ① fastening the stay bracket inside the front panel assembly.(See Fig. 5-21)
7. Remove the nine screws ② fastening the system CPU board.(See Fig. 5-22)
8. Disconnect the card wires protruding from connector CN305 on the head amplifier & mechanism control board from connector CN700 on the system CPU board. (See Figs. 5-22,5-23)

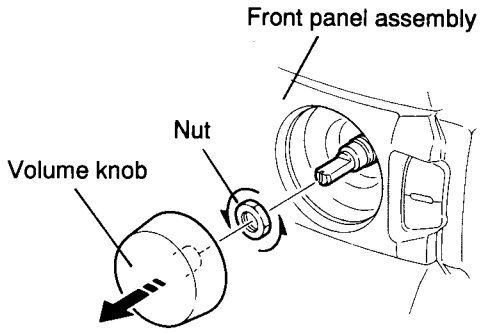

Fig.5-20

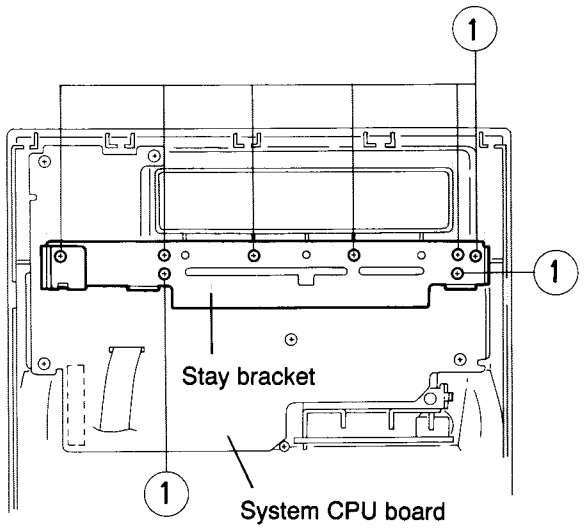

Fig.5-21

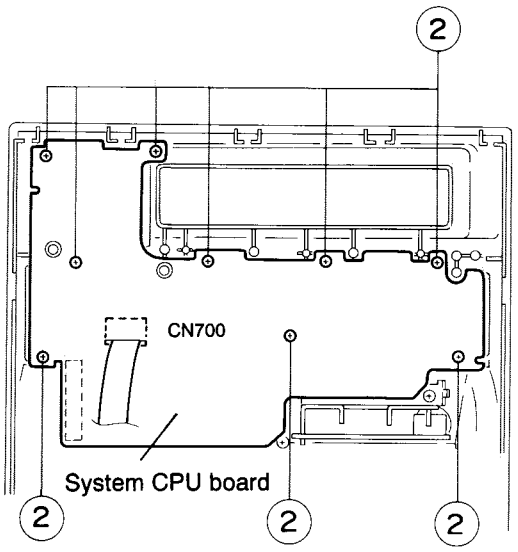

Fig.5-22

■ Removal of the Cassette Mechanism Assembly

(See Fig. 5-23)

1. Remove the metal cover.
2. Remove the CD traverse mechanism assembly.
3. Remove the front panel assembly.
4. Remove the eight screws ③ fastening the cassette mechanism assembly to the inside of the front panel assembly.
5. Disconnect the card wires from connectors CN305 and CN306 on the head amplifier & mechanism control board.

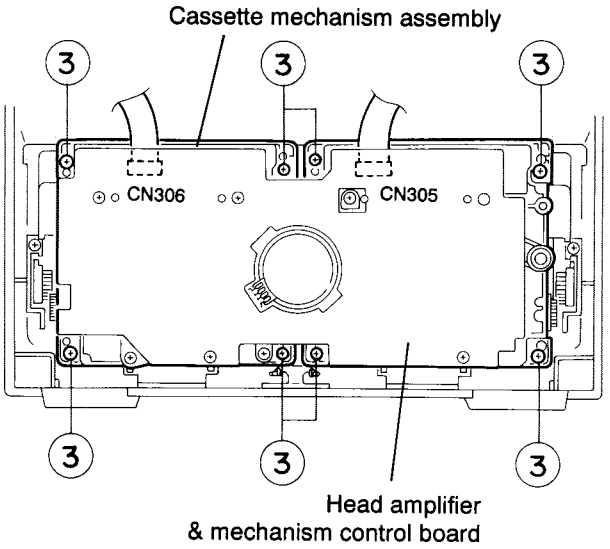

Fig.5-23

《Cassette Mechanism Section》

■ Removing the Playback, Recording and Eraser Heads

1. While shifting the trigger arms seen on the right side of the head mount in the arrow direction, turn the flywheel R in counterclockwise direction until the head mount has gone out with a click (See Fig. 5-24).
2. When the flywheel R is rotated in counterclockwise direction, the playback head will be turned in counterclockwise direction from the position in Fig. 5-25 to that in Fig. 5-26.
3. At this position, disconnect the flexible P.C. board (outgoing from the playback head) from the connector CN301 on the head amp. & mechanism control P.C. board.
4. After dismounting the FPC holder, remove the flexible P.C. board.
5. Remove the flexible P.C. board from the chassis base.
6. Remove the spring ⓐ from behind the playback head.
7. Loosen the reversing azimuth screw retaining the playback head.
8. Take out the playback head from the front of the head mount.
9. The recording and eraser heads should also be removed similarly according to Steps 1~8 above.

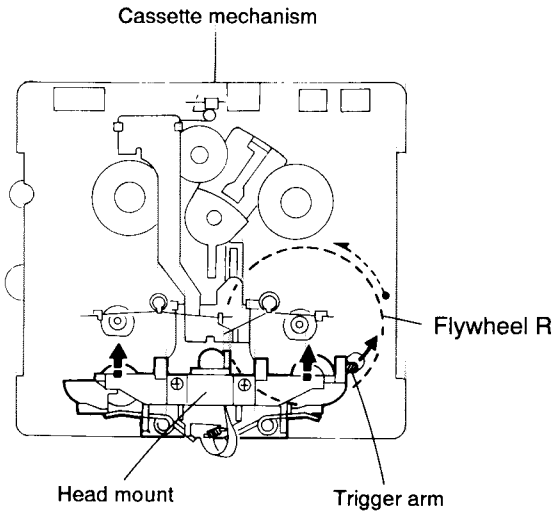

Fig.5-24 (Mechanism A side)

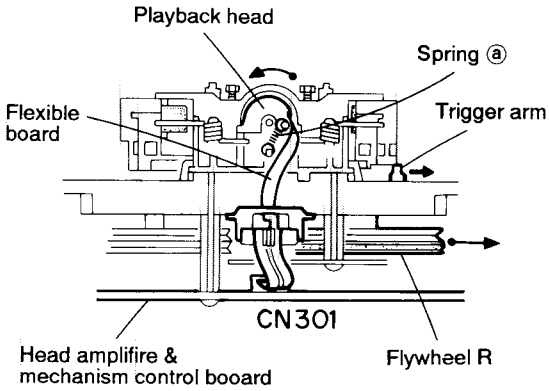

Fig.5-25 (Mechanism A side)

● Reassembling the Playback, Recording and Eraser Heads

1. Reassemble the playback head from the front of the head mount to the position as shown in Fig. 5-26.
2. Fix the reversing azimuth screw.
3. Set the spring ⓐ from behind the playback head.
4. Attach the flexible P.C. board to the chassis base, and fix it with the FPC holder as shown in Fig. 5-26.
5. The recording and eraser heads should also be reassembled similarly according to Steps 1~4 above.

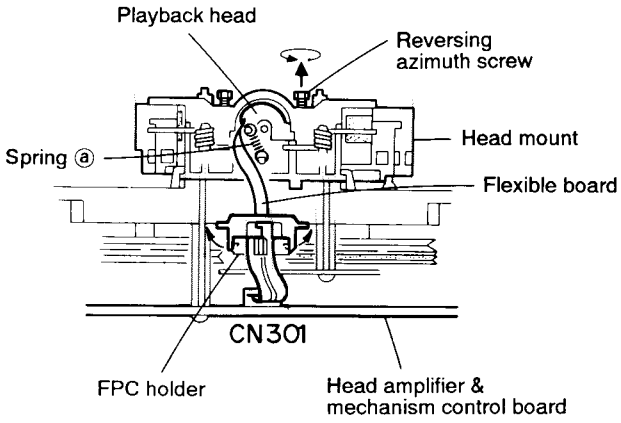

Fig.5-26 (Mechanism B side)

■ Removing the Head Amp. & Mechanism Control P.C. Board (See Fig. 5-27)

1. Remove the cassette mechanism assembly.
2. After turning over the cassette mechanism assembly, remove the five screws ① retaining the head amp. & mechanism control P.C. board.
3. Disconnect the connectors CN303 and CN304 on the P.C. board and the connectors CN1 on both the right and left side reel pulse P.C. boards.
4. When necessary, remove the 4pin parallel wire soldered to the main motor.

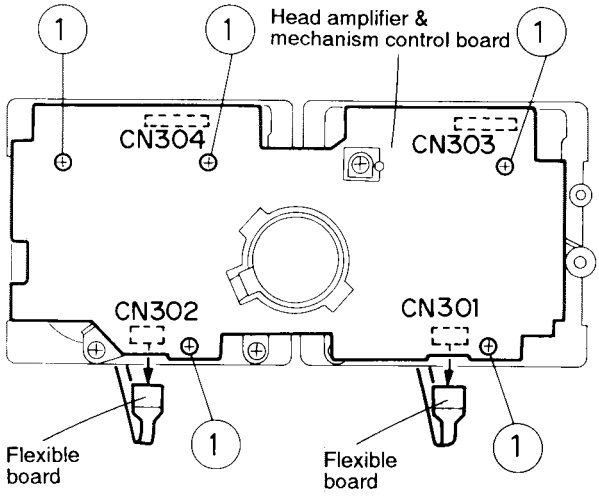

Fig.5-27

■ Removing the Capstan Motor Assembly

1. Remove the six screws ② retaining the capstan motor assembly (See Fig. 5-28).
2. While raising the capstan motor, remove the capstan belts A and B respectively from the motor pulley (See Figs. 5-28,5-29)

   Caution 1: Be sure to handle the capstan belts so carefully that these belts will not be stained by grease and other foreign matter. Moreover, these belts should be hanged while referring to the capstan belt hanging method in Fig. 5-29,5-30.

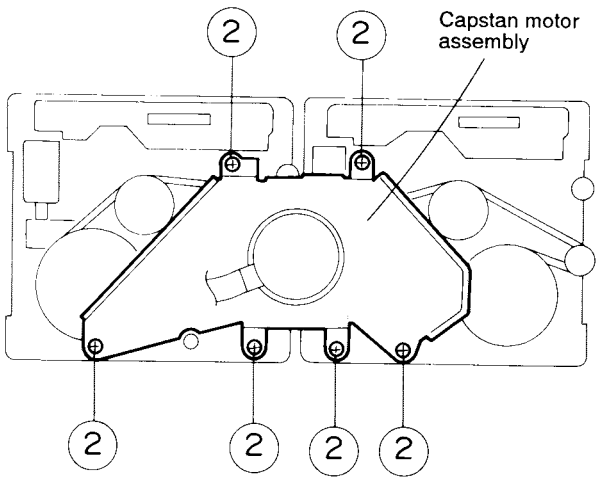

Fig.5-28

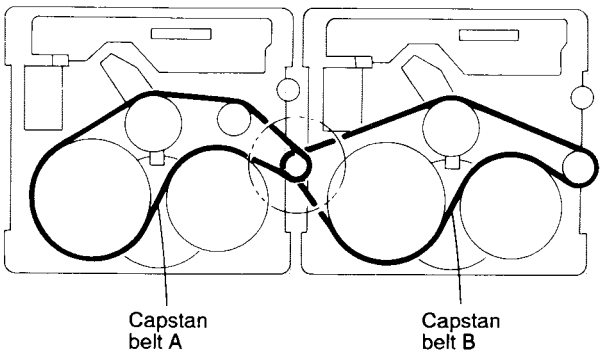

Fig.5-29

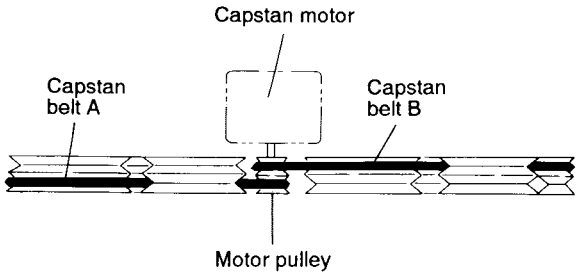

Fig.5-30

■ Removing the Capstan Motor (See Figs. 5-31)

From the joint bracket, remove the two screws ③ retaining the capstan motor.

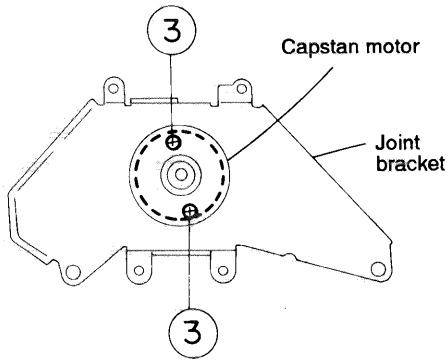

Fig.5-31

■ Removing the Flywheel (See Figs. 5-32,5-33)

1. Remove the head amp. & mechanism control P.C. board.
2. Remove the capstan motor assembly.
3. After turning over the cassette mechanism, remove the slit washers ⓐ and ⓑ fixing the capstan shafts R and L, and pull out the flywheels R and L respectively from behind the cassette mechanism.

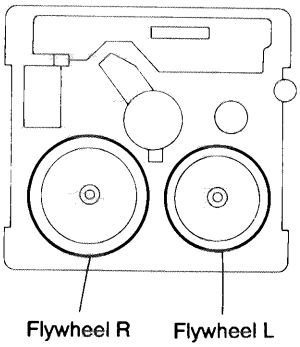

Fig.5-32

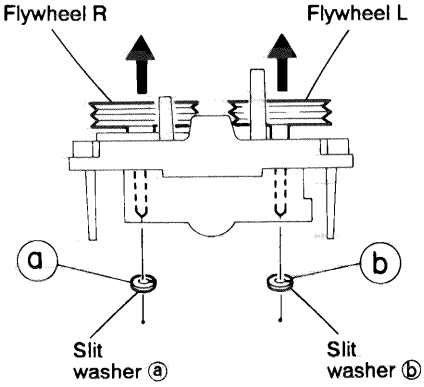

Fig.5-33

■ Removing the Reel Pulse P.C. Board and Solenoid (See Figs. 5-34)

1. Remove the five pawls (ⓒ, ⓓ, ⓔ, ⓕ and ⓖ) retaining the reel pulse P.C. board.
2. From the surface of the reel pulse P.C. board parts, remove the two pawls ⓗ and ⓘ retaining the solenoid.

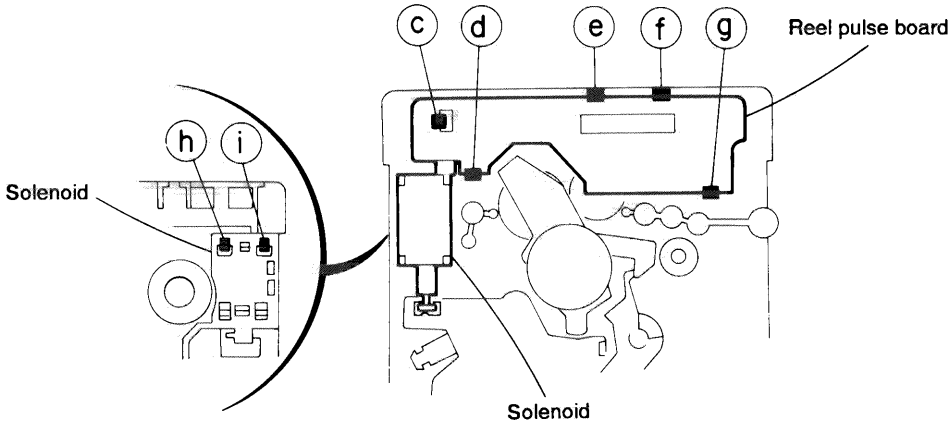

Fig.5-34

« CD Traverse Mechanism Sections »

■ Removing the CD Servo control board (See Fig. 5-35).

1. Remove the Metal cover.
2. Remove the CD Traverse mechanism assembly.
3. From bottom side the CD Traverse mechanism assembly, remove theone screw ① retaining the CD Servo control board.
4. From the connectors CN601, CN603, CN604 on the CD Servo control board, disconnect the card wire, from the connector CN602, disconnect the 6pin connector wire.
5. Disengage the two engagements "A" , remove the CD Servo control board.

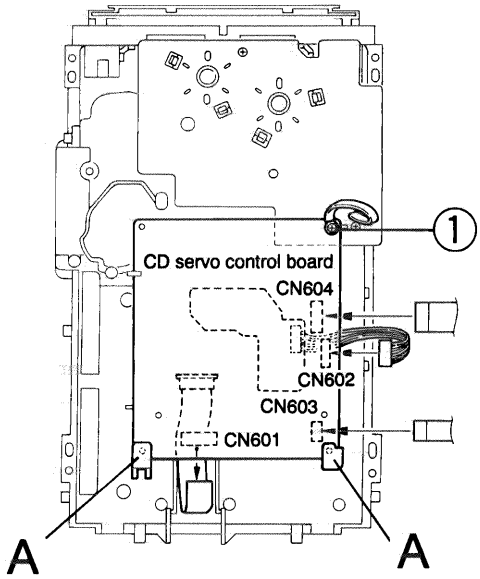

Fig.5-35

■ Removing the CD tray assembly (See Figs. 5-36~5-38)

1. Remove the front panel assembly.
2. Remove the CD Traverse mechanism assembly.
3. Remove the CD Servo control board.
4. From the T. bracket section "B" and clamper base section "C", remove both of the edges fixing the rod (See Figs. 5-36 and 5-37).
5. Remove the screw ② retaining the Disc stopper(See Fig. 5-37).
6. Remove the three screws ③ retaining the T. bracket **(See Fig.5-37).**
7. Remove the screw ④ retaining the clamper assembly (See Fig. 5-37).
8. From the left side face of the chassis assembly, remove the one screw ⑤ retaining both of the return spring and lock lever. (See Fig. 5-38)
9. By removing the pawl at the section "D" fixing the return spring, dismount the return spring (See Fig. 5-38).
10. Remove the three lock levers (See Fig. 5-38).

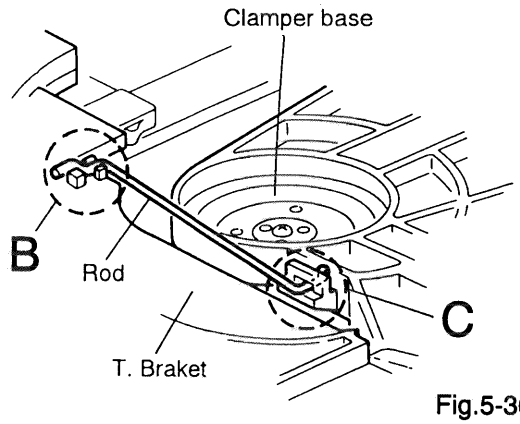

Fig.5-36

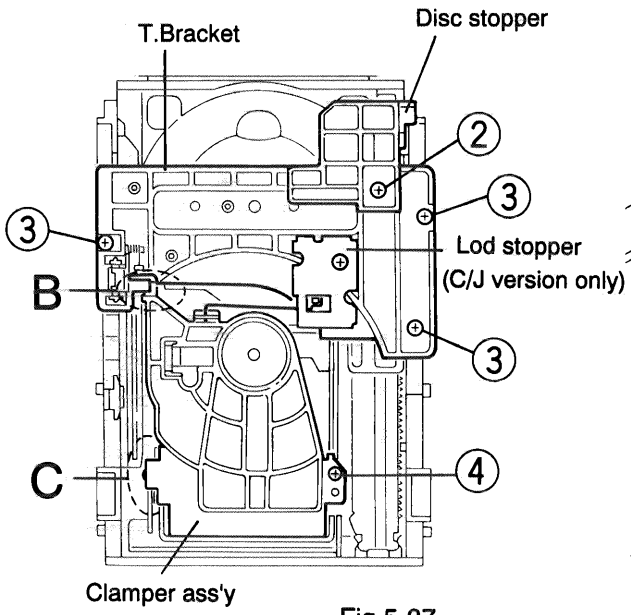

Fig.5-37

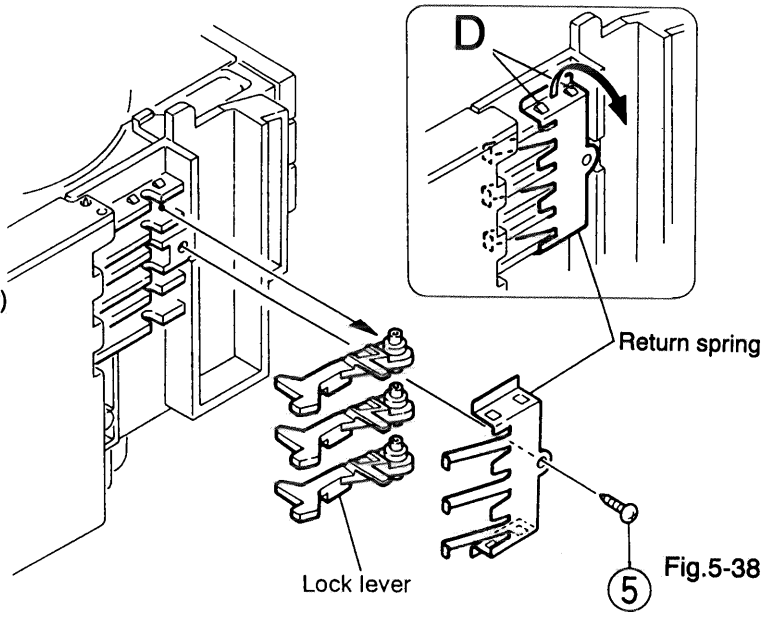

Fig.5-38

11. Check whether the lifter unit stopper has been caught into the hole at the section "E" of CD tray assembly as shown in Fig. 5-39.
12. Make sure that the driver unit elevator is positioned as shown in Fig. 5-40 from to the second or fifth hole on the left side face of the CD Traverse mechanism assembly.

[Caution] In case the driver unit elevator is not at the above position, set the elevator to the position as shown in Fig. 5-41 by manually turning the pulley gear as shown in **Fig. 5-42.**

13. Manually turn the motor pulley in the clockwise direction until the lifter unit stopper is lowered from the section "E" of CD tray assembly **(See Fig.5-42).**
14. Pull out all of the three stages of CD tray assembly in the arrow direction "F" until these stages stop (See Fig. 5-40).
15. At the position where the CD tray assembly has stopped, pull out the CD tray assembly while pressing the two pawls "G and G'" on the back side of CD tray assembly (See Fig. 5-43). In this case, it is easy to pull out the assembly when it is pulled out first from the stage CD tray assembly.

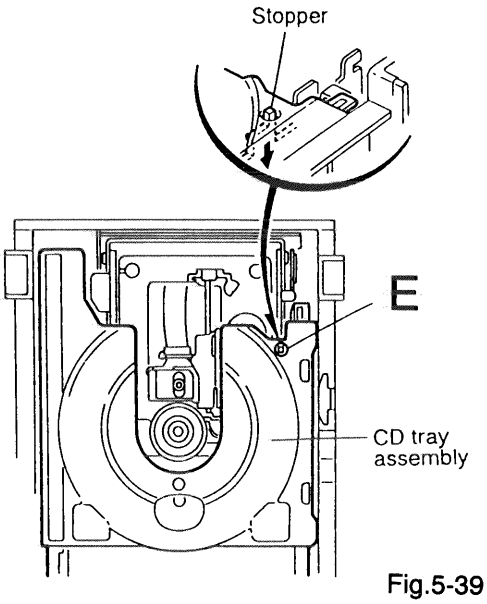

Fig.5-39

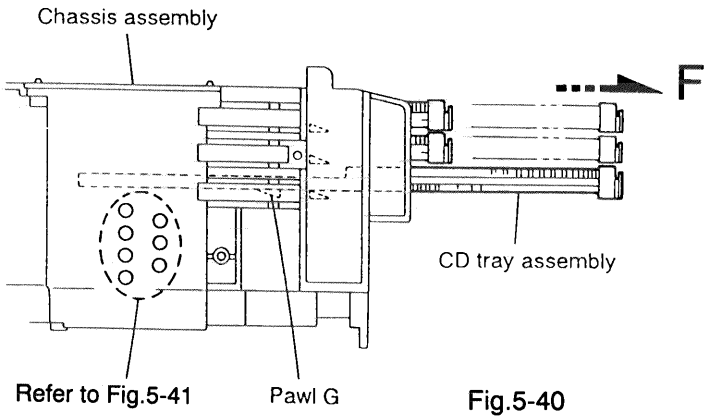

Fig.5-40

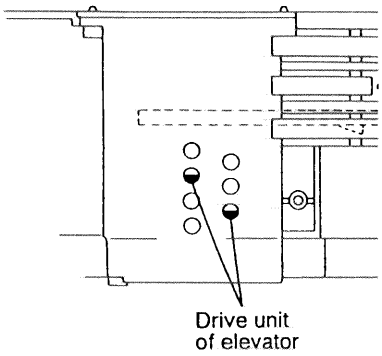

Fig.5-41

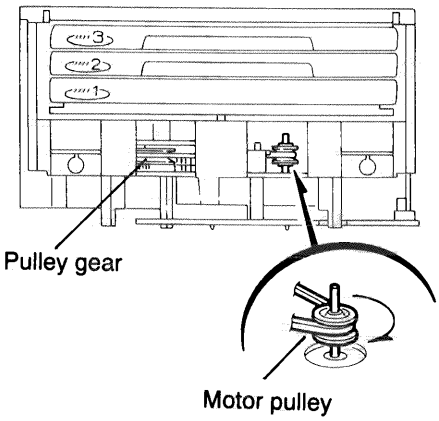

Fig.5-42

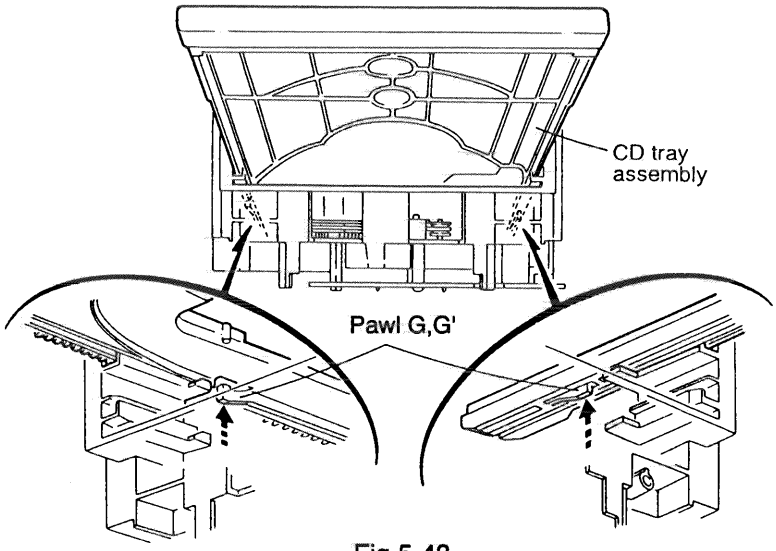

Fig.5-43

Removing the CD mechanism assembly (See Fig. 5-44)

1. While turning the cams R1 and R2 assembly in the arrow direction "H", align the shaft "I" of the CD mechanism assembly to the position shown in Fig. 5-44.
2. Remove the four screws ⑥ retaining the CD mechanism assembly (See Fig. 5-44).

Removing the CD mechanism (See Figs. 5-45 and 5-46)

1. For dismounting only the CD mechanism without removing the CD mechanism assembly, align the shaft "J" of the CD mechanism assembly to the position shown in Fig. 5-45 while turning the cam R1 and R2 assembly in the arrow direction "K".
2. By raising the CD mechanism assembly in the arrow direction "L", remove the assembly from the lifter unit (Fig. 5-46).

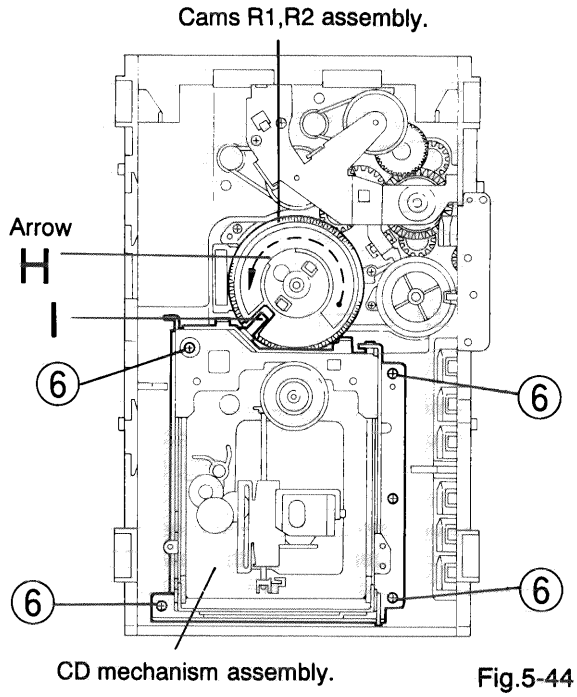

Fig.5-44

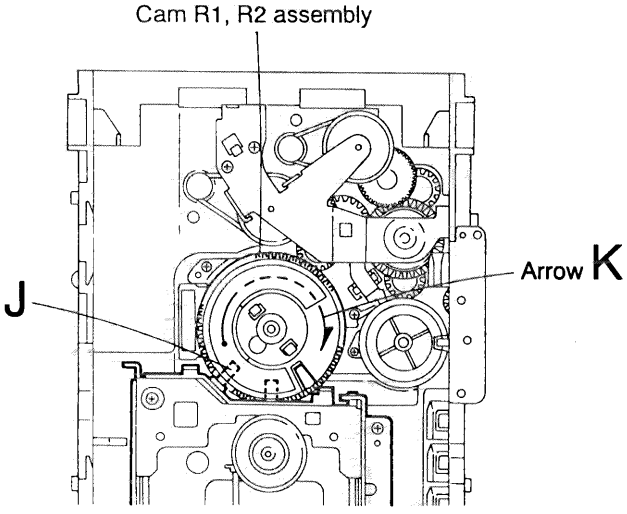

Fig.5-45

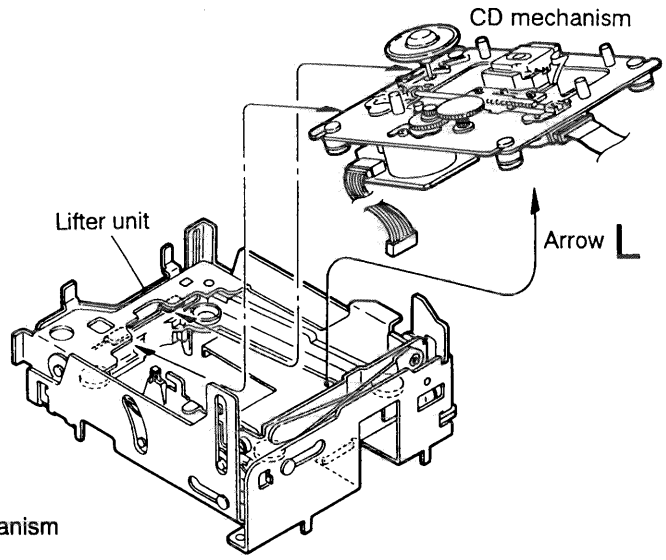

Fig.5-46

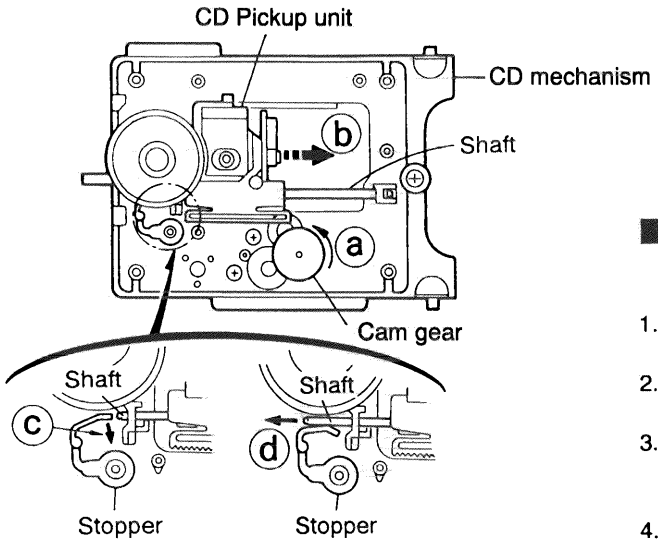

Fig.5-47

Removing the CD pickup unit (See Fig.5-47)

1. Move the cam gear in the arrow direction ⓐ. Then, the CD pickup unit will be moved in the arrow direction ⓑ.
2. According to the above step, shift the CD pickup unit to the center positior (See Fig.5-47).
3. While pressing the stopper retaining the shaft in the arrow direction ⓒ, pull out the shaft in the arrow direction ⓓ (See Fig.5-47).
4. After dismounting the shaft from the CD pickup unit, remove the CD pickup unit.

■ Removing the actuator motor board

(See Figs. 5-48 and 5-49)

1. Absorb the four soldered positions "M" of the right and left motors with a soldering absorber (See Fig. 5-48).
2. Remove the two screws ⑦ retaining the actuator motor board (See Fig. 5-48).
3. Remove the two screws ⑧ retaining the tray select switch board (See Fig. 5-49).

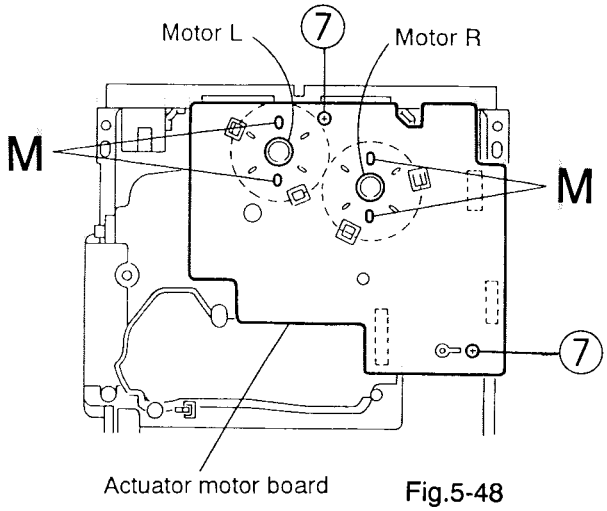

Fig.5-48

■ Removing the cam unit

(See Figs. 5-50~5-52)

1. Remove the CD mechanism assembly.
2. While turning the cam gear L, align the pawl "N" position of the drive unit to the notch position (Fig. 5-50) on the cam gear L.
3. Pull out the drive unit and cylinder gear (See Fig. 5-51).
4. While turning the cam gear L, align the pawl "O" position of the select lever to the notch position (Fig. 5-52) on the cam gear L.
5. Remove the four screws ⑨ retaining the cam unit (cam gear L and cams R1/R2 assembly) (See Fig. 5-52).

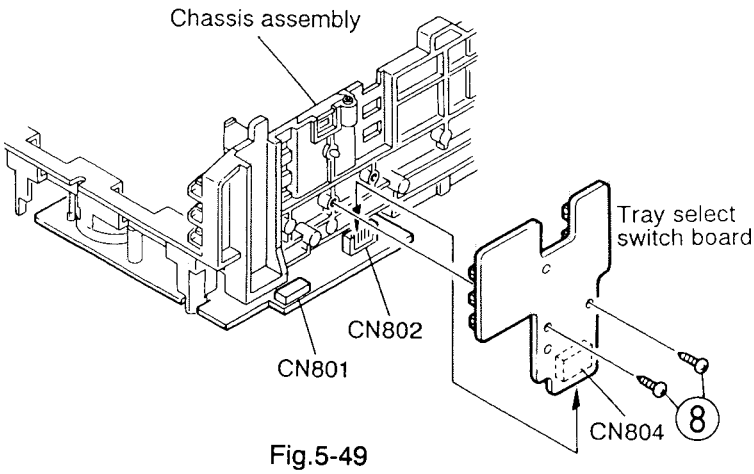

Fig.5-49

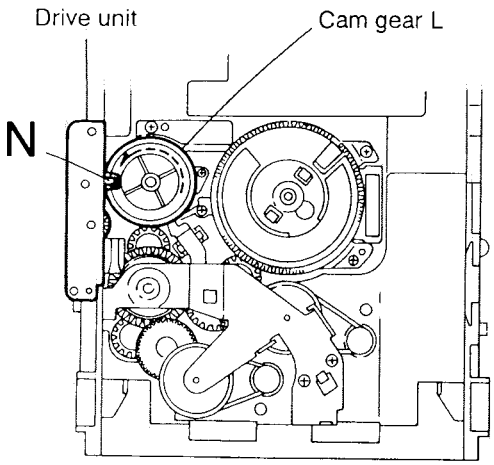

Fig.5-50

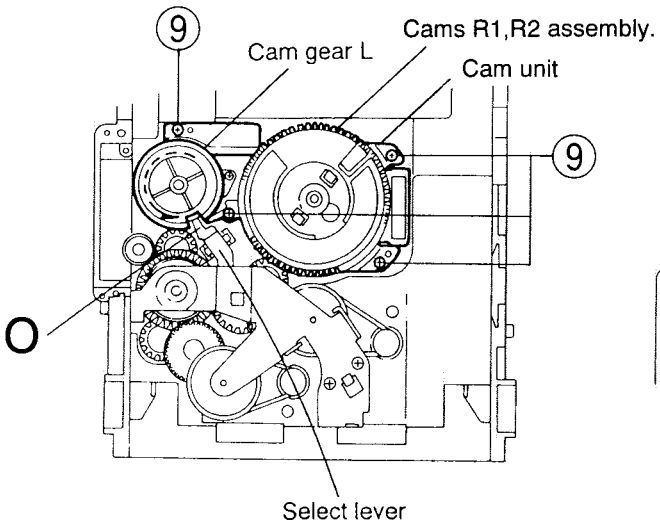

Fig.5-52

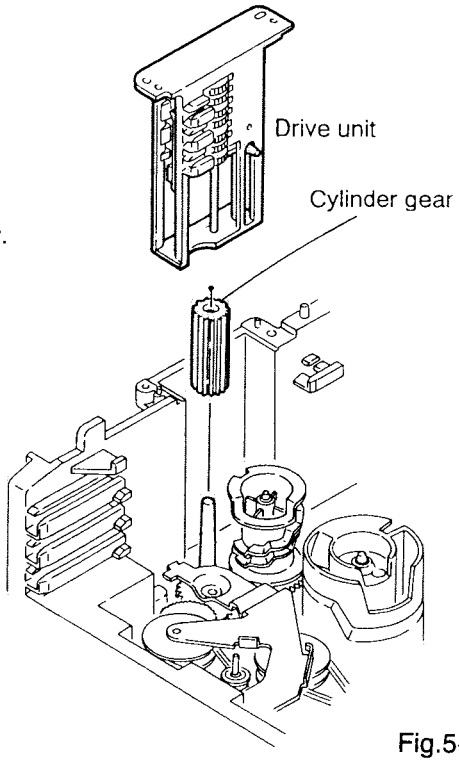

Fig.5-51

■ Removing the actuator motor and belt

(See Figs. 5-53~5-56)

1. Remove the two screws ⑩ retaining the gear bracket (See Fig. 5-53).
2. While pressing the pawl "P" fixing the gear bracket in the arrow direction, remove the gear bracket (See Fig. 5-53).
3. From the notch "Q section" on the chassis assembly fixing the edge of gear bracket, remove and take out the gear bracket (See Fig. 5-54).
4. Remove the belts respectively from the right and left actuator motor pulleys and pulley gears (See Fig. 5-53).
5. After turning over the chassis assembly, remove the actuator motor while spreading the four pawls "R" fixing the right and left actuator motors in the arrow direction (See Fig. 5-55).

[Note] When the chassis assembly is turned over under the conditions wherein the gear bracket and belt have been removed, then the pulley gear as well as the gear, etc. constituting the gear unit can possibly be separated to pieces. In such a case, assemble these parts by referring to the assembly and configuration diagram in Fig. 5-56.

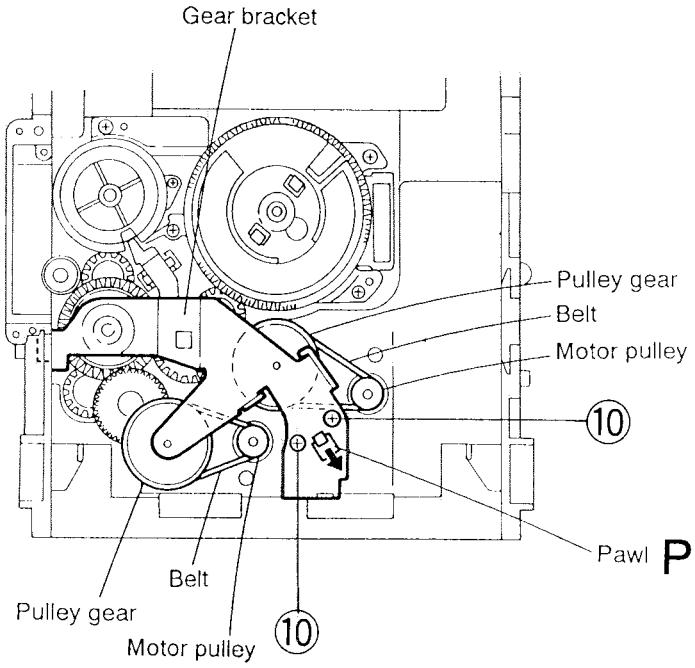

Fig.5-53

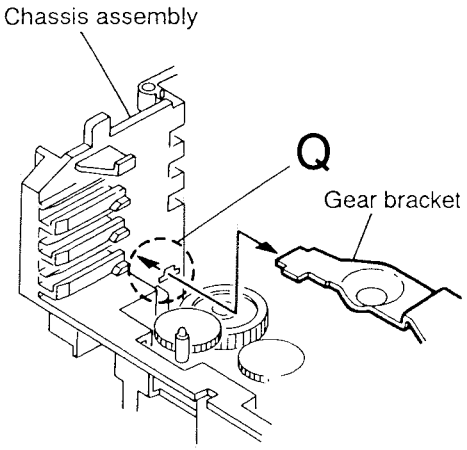

Fig.5-54

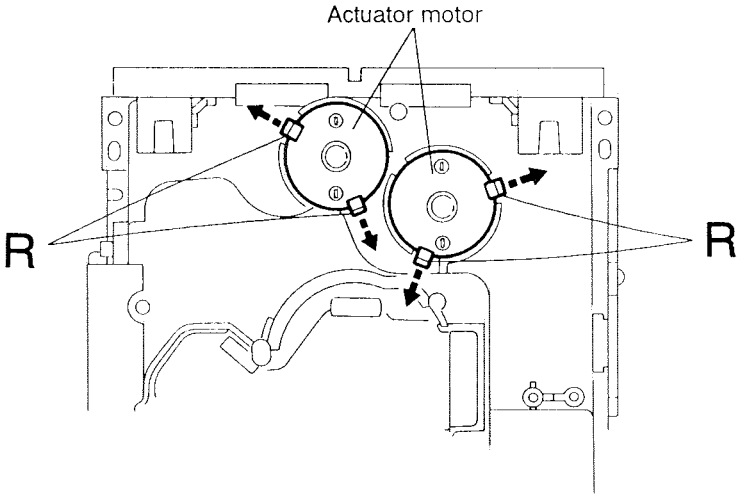

Fig.5-55

Assembly and Configuration Diagram

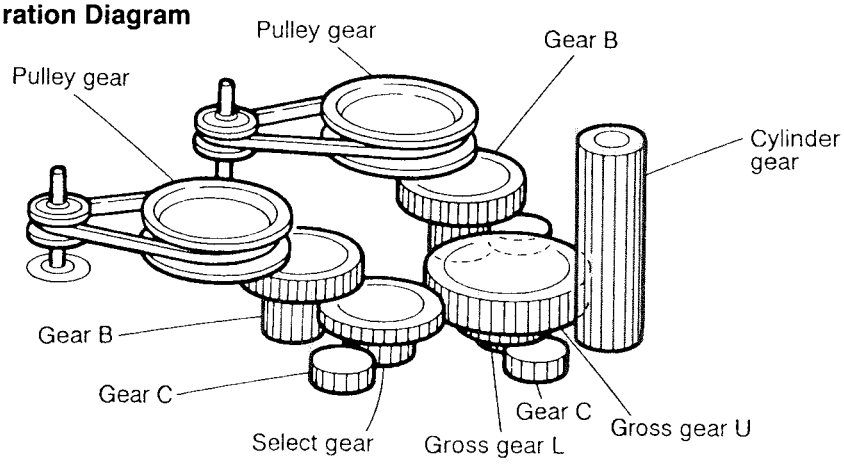

Fig.5-56

■ Removing the cams R1/R2 assembly and cam gear L (See Fig. 5-57)

1. Remove the slit washer fixing the cams R1 and R2 assembly.
2. By removing the two pawls "S" fixing the cam R1, separate R2 from R1.
3. Remove the slit washer fixing the cam gear L.
4. Pull out the cam gear L from the C.G. base assembly.

■ Removing the C.G. base assembly

(See Figs. 5-57 and 5-58)

Remove the three screws ⑪ retaining the C.G. base assembly.

[Caution] To reassemble the cylinder gear, etc. with the cam unit (cam gear and cams R1/R2 assembly), gear unit and drive unit, align the position of the pawl "N" on the drive unit to that of the notch on the cam gear L. Then, make sure that the gear unit is engaged by turning the cam gear L. **(See Fig.5-58)**

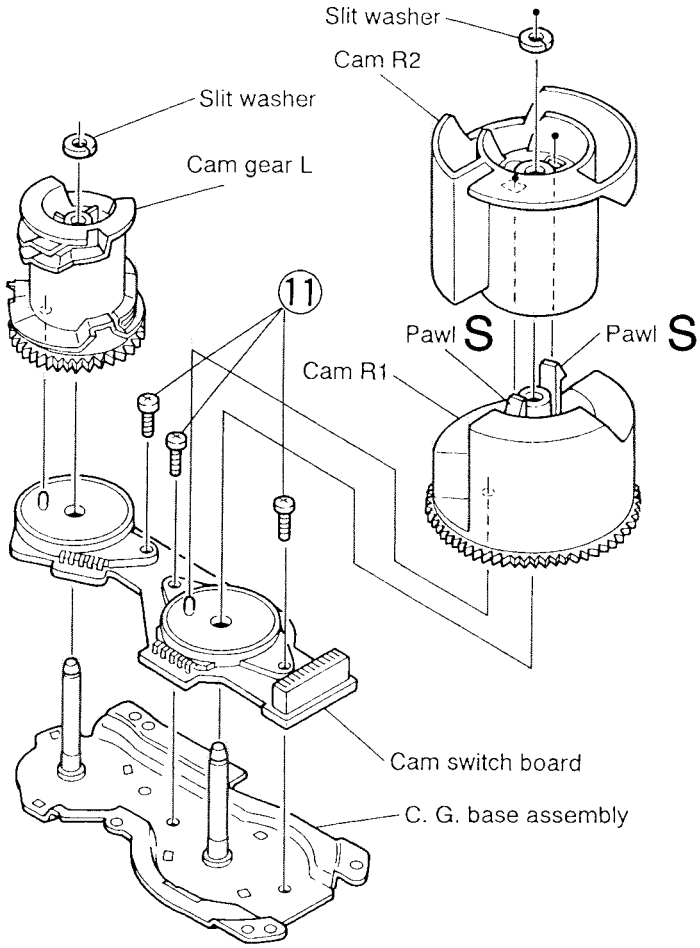

Fig.5-57

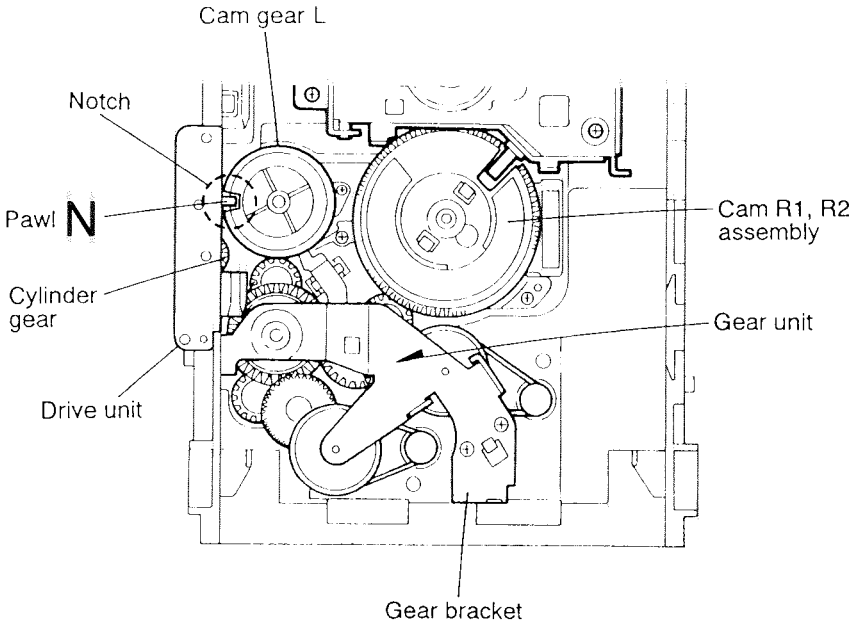

Fig.5-58

6.Main Adjustment

■ Measurement Instruments Required for Adjustment

1. Low frequency oscillator
   This oscillator should have a capacity to output 0dBs to 600 Ω at an oscillation frequency of 50Hz~20kHz.
2. Attenuator impedance: 600 Ω
3. Electronic voltmeter
4. Distortion meter
5. Frequency counter
6. Wow flutter
7. Test tape
   VTT 712: Tape speed and running unevenness (3kHz)
   VTT 724: Reference level (1kHz)
   TMT 7036: Head angle (10kHz), playback frequency characteristics (1kHz) and dubbing frequency characteristics (63, 1 and 10kHz)
   Because of frequency - mixed tape with 63, 1, 10 and 14kHz (250nWb/m - 24dB), use this tape together with a filter.
8. Blank tape
   TAPE I : AC-225
   TAPE II : AC-514
9. Torque gauge: For play and back tension
   FWD (TW2111A), REV (TW2121A) and
   FF/REW (TW2231A)

■ Measurement Conditions

Power supply voltage.....AC120V(50Hz:CJ)
AC240V(50/60Hz:A)
AC230V(50Hz:B/E/EN/G/VX)
AC110~127V/220~240V(50/60Hz:UB/US/UT/U)
Reference output·····Speaker: 0.775V/3 Ω
Headphone: 0.245V/32 Ω
Reference frequency and input level · 1kHz, AUX: - 8dBs
Input for confirming recording and playback characteristics ·····AUX: - 28dBs
Measurement output terminal·····Speaker CN192
※ Load resistance ·····3 Ω

● Radio input signal

AM modulation frequency ·····400Hz
Modulation factor·····30%
FM modulation frequency ·····400Hz
Frequency displacement·····22.5kHz

● Standard measurement positions of volume

Sound mode ····· Flat position
Super - bas ····· Off
Up and down adjustment of volume·····VOL. 23

Precautions for Measurement

1. Apply 30pF and 33kΩ to the IF sweeper output side and 0.082μF and 100kΩ in series to the sweeper input side.
2. The IF sweeper output level should be made as low as possible within the adjustable range.
3. Since the IF sweeper is a fixed device, there is no need to adjust this sweeper.
4. Since a ceramic oscillator is used, there is no need to perform any MPX adjustment.
5. Since a fixed coil is used, there is no need to adjust the FM tracking.
6. The input and output earth systems are separated. In case of simultaneously measuring the voltage in both of the input and output systems with an electronic voltmeter for two channels, therefore, the earth should be connected particularly carefully.
7. In the case of BTL connection amp., the minus terminal of speaker is not for earthing. Therefore, be sure not to connect any other earth terminal to this terminal. This system is of an OTL system.
8. For connecting a dummy resistor when measuring the output, use the wire with a greater core size.
9. Whenever any mixed tape is used, use the band pass filter (DV-12).

《Arrangement of Adjusting Positions》

● **Cassette mechanism section (Mechanism A section)**

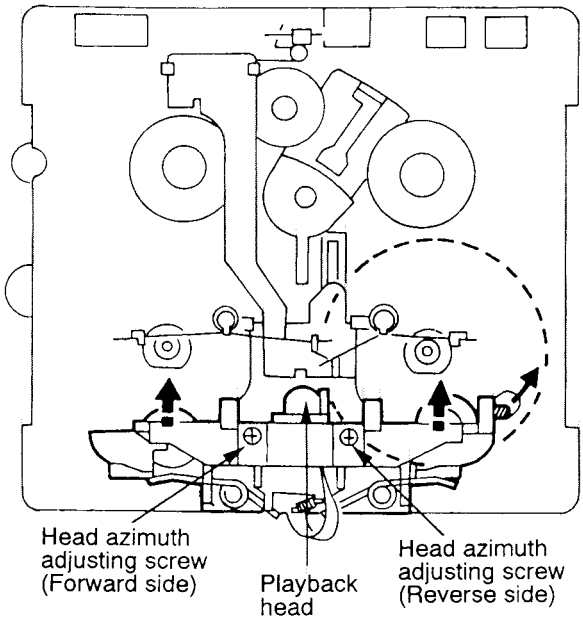

● **Cassette mechanism section (Back side)**

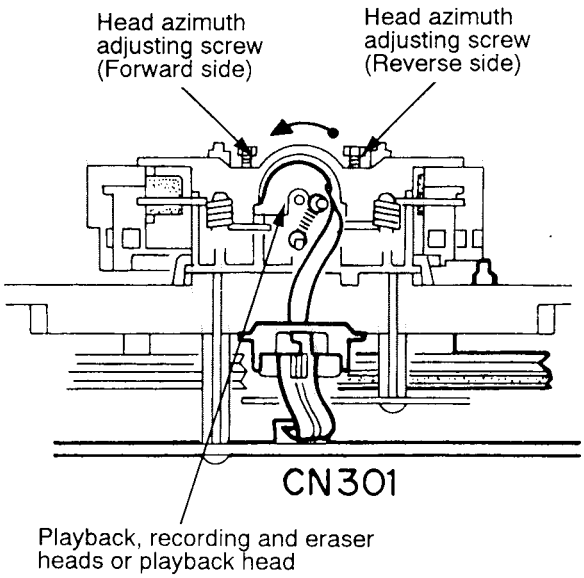

Fig.6-1

■ **Cassette Mechanism Unit Section**

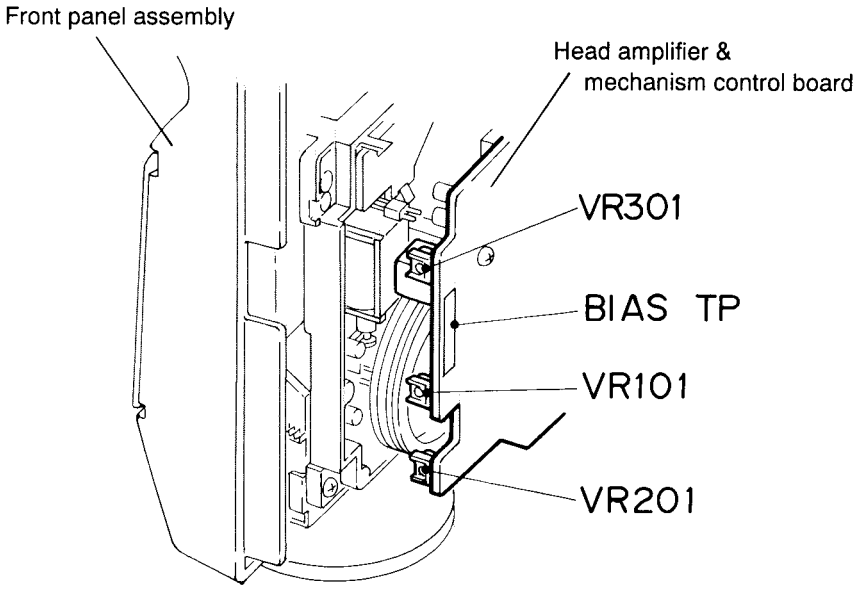

Fig.6-2

■ Tape Recorder Section

Items	Measurement conditions	Measurement method	Standard values	Adjusting positions
Confirmation of head angle	Test tape : TMT7036 (10kHz) Measurement output terminal : Speaker terminal Speaker R (Load resistance: 3 Ω) : Headphone terminal	① Play back the test tape TMT7036 (10kHz). ② With the playback mechanism or recording & playback mechanism, adjust the head azimuth screw so that the forward and reverse output levels become maximum. After adjustment, lock the head azimuth at least by half a turn. ③ In either case, this adjustment should be performed in both the forward and reverse directions with the head azimuth screw.	Maximum output	Adjust the head azimuth screw only when the head has been changed.
Confirmation of tape speed	Test tape : VTT712 (3kHz) or TMT7036 (3kHz) Measurement output terminal : Headphone terminal	《Constant speed》 Adjust VR301 so that the frequency counter reading becomes 3,010Hz ± 15Hz when playing back the test tape VTT712 (3kHz) with the playback mechanism or playback and recording mechanism after ending forward winding of the tape.	Tape speed of decks (A and B) : 3,010Hz ± 15Hz	VR301

■ Reference Values for Confirmation Items

Items	Measurement conditions	Measurement method	Standard values	Remarks
Double tape speed	Test tape : TMT7036 (10kHz) Measurement output terminal : Speaker terminal Speaker R (Load resistance: 3 Ω) measurement output terminal : Headphone terminal	① After setting to the double speed motor, confirm that the frequency counter reading becomes 4,800 +400/-300Hz when the test tape VTT712 (3kHz) has been played back with the playback mechanism.	4,800 +400/-300Hz	Playback mechanism side
Difference between the forward and reverse speed	Test tape : TMT7036 (10kHz) Measurement output terminal : Speaker terminal Speaker R (Load resistance: 3 Ω) measurement output terminal : Headphone terminal	When the test tape VTT712 (3kHz) has been played back with the playback mechanism or recording and playback mechanism at the beginning of forward winding, the frequency counter reading of the difference between both of the mechanisms should be 6.0Hz or less.	6.0Hz or less	Both the playback and recording & playback mechanisms
Difference between the playback mechanism and recording and playback mechanism speed	Test tape : TMT7036 (10kHz) Measurement output terminal : Speaker terminal Speaker R (Load resistance: 3 Ω) measurement output terminal : Headphone terminal	When the test tape VTT712 (3kHz) has been played back with the playback mechanism or recording and playback mechanism at the beginning of forward winding, the frequency counter reading of the difference between both of the mechanisms should be 6.0Hz or less.	6.0Hz or less	Both the playback and recording & playback mechanisms
Wow & flutter	Test tape : TMT7036 (10kHz) Measurement output terminal : Headphone terminal	When the test tape VTT712 (3kHz) has been played back with the playback mechanism or recording and playback mechanism at the beginning of forward winding, the frequency counter reading of wow & flutter should be 0.25% or less (WRMS).	0.25% or less (WRMS)	Both the playback and recording & playback mechanisms

■ Electrical Performance

Items	Measurement conditions	Measurement method	Standard values	Adjusting positions
Adjustment of recording bias current (Reference value)	• Mode: Forward or reverse mode • Recording mode • Test tape : AC-514 and AC-225 Measurement output terminal : Both recording and headphone terminals	① With the recording and playback mechanism, load the test tapes (AC-514 to TYP Ⅱ and AC-225 to TYP Ⅰ), and set the mechanism to the recording and pausing conditions in advance. ② After connecting 100 Ω in series to the recorder head, measure the bias current with a valve voltmeter at both of the terminals. ③ After resetting the [PAUSE] mode, start recording. At this time, adjust VR101 for LcH and VR201 for RcH so that the recording bias current values become 4.0 μ A(TYP Ⅰ)and 4.20 μ A (TYP Ⅱ).	AC-225 : 4.20 μ A AC-514 : 4.0 μ A	LcH :VR101 RcH :VR201
Adjustment of recording and playback frequency characteristics	Reference frequency : 1kHz and 10kHz (REF.: -20DB) Test tape : TYP Ⅱ: AC-514 Measurement input terminal : OSC IN	① With the recording and playback mechanism, load the test tape (AC-514 to TYP Ⅱ) ,and set the mechanism to the recording and pausing conditions in advance. ② While repetitively inputting the reference frequency signal of 1kHz and 10kHz from OSC IN, record and play back the test tape. ③ While recording and playing back the test tape in TYP Ⅱ ,adjust VR101 for LcH and VR 201 for RcH so that the output deviation between 1kHz and 10kHz becomes -1dB ± 2dB.	Output deviation between 1kHz and 10kHz : -1dB± 2dB	LcH :VR101 RcH :VR201

■ Reference Values for Electrical Function Confirmation Items

Items	Measurement conditions	Measurement method	Standard values	Remarks
Recording bias frequency	• Recording and playback side forward or reverse • Test tape : TYP Ⅱ: AC-514 • Measurement terminal: BIAS TP on P.C. board	① While changing over to and from BIAS 1 and 2, confirm that the frequency is changed. ② With the recording and playback mechanism, load the test tape (AC-514 to TYP Ⅱ), and set the mechanism to the recording and pausing conditions in advance. ③ Confirm that the BIAS TP frequency on the P.C. board is 100kHz ± 6kHz.	100kHz ± 6kHz	
Eraser current (Reference value)	• Recording and playback side forward or reverse • Recording mode • Test tape : AC-514 and AC-225 Measurement terminal: Both of the eraser head	① With the recording and playback mechanism, load the test tapes (AC-514 to TYP Ⅱ and AC-225 to TYP Ⅰ), and set the mechanism to the recording and pausing conditions in advance. ② After setting to the recording conditions, connect 1W in series to the eraser head on the recording and playback mechanism side, and measure the eraser current from both of the eraser terminals.	TYP Ⅱ : 120mA TYP Ⅰ : 75mA	

-MEMO-

7.Out Line of Main IC

■ IC701 : μ PD78044FGF-055 (System CPU) Port Map Table

Pin No.	Port Name	I/O	Function
1	7G	O	FL Grid 7
2	6G	O	FL Grid 6
3	5G	O	FL Grid 5
4	4G	O	FL Grid 4
5	3G	O	FL Grid 3
6	2G	O	FL Grid 2
7	1G	O	FL Grid 1
8	VDD	–	+ 5V
9	SCK	O	Serial Clock (PLL, SLC, Vol, C3)
10	SDATA	I/O	Serial data (PLL, SLC, Vol, C3)
11	$\overline{\text{F. AUX}}$	O	AUX Mute
12	$\overline{\text{LED TAPE}}$	O	LED TAPE
13	STTA	O	Strobe Tape Control
14	SQCK	O	Sub Code Clock
15	NC		Non connection
16	SUBQ/RDA	I	Sub Code Data/RDS Data
17	$\overline{\text{REST}}$	I	System Reset
18	A REEL	I	Tape A mechanism runing detection
19	B REEL	I	Tape B mechanism runing detection
20	AVss	–	AD Ground
21	REST/REQ	I	Reset Switch/Changer Request
22	SAFETY	I	Trouble Detection
23	TAPE3	I	
24	TAPE2	I	
25	TAPE3	I	
26	KEY3	I	
27	KEY2	I	
28	KEY1	I	
29	AVdd	–	AD + 5V
30	AVREF	–	AD REF + 5V
31	XT1	I	Sub Clock 32.768kHz
32	XT2	O	
33	Vss	–	Ground
34	X1	I	Main Clock 4.19MHz
35	X2	O	
36	BEAT	O	Main Clock Shift
37	MS	I	Music Scan
38	$\overline{\text{MPX}}$	I	Stereo Detect
39	$\overline{\text{+BCTL}}$	O	5V Switch
40	MLCK	O	

Pin No.	Port Name	I/O	Function
41	$\overline{\text{XRST}}$	O	
42	MLD	O	
43	MDATA	O	
44	STCH	O	Strobe Changer Control
45	STATUS	I	CD STATUS (PO) /RDS CLK (INT)
46	POUT	O	Power on/off
47	REM	I	Remote Control
48	Vss	–	Ground
49	$\overline{\text{SMUTE}}$	O	System Mute
50	F.CD	O	Function CD
51	F.TU	O	Function CD
52	Vdd	-	+ 5V
53	VOL –	I	Volume Encoder Input (–)
54	VOL +	I	Volume Encoder Input (+)
55	SPK	O	Speaker Relay on/off
56	PROTECT	I	Protector Input
57	BUP	I	Buck up Detect
58	LATCH	O	Volume IC Strobe
59	PERIOD	O	Tuner PLL Strobe
60	S1	O	FL Segment 1
61	S2	O	FL Segment 2
62	S3	O	FL Segment 3
63	S4	O	FL Segment 4
64	S5	O	FL Segment 5
65	S6	O	FL Segment 6
66	S7	O	FL Segment 7
67	S8	O	FL Segment 8
68	S9	O	FL Segment 9
69	S10	O	FL Segment 10
70	S11	O	FL Segment 11
71	VLOAD	–	
72	S12	O	FL Segment 12
73	S13	O	FL Segment 13
74	S14	O	FL Segment 14
75	S15	O	FL Segment 15
76	S16	O	FL Segment 16
77	11G	O	FL Grid 11
78	10G	O	FL Grid 10
79	9G	O	FL Grid 9
80	8G	O	FL Grid 8

8.Wiring Connections

■ B/C/E/G/J/EN/VX Version Section

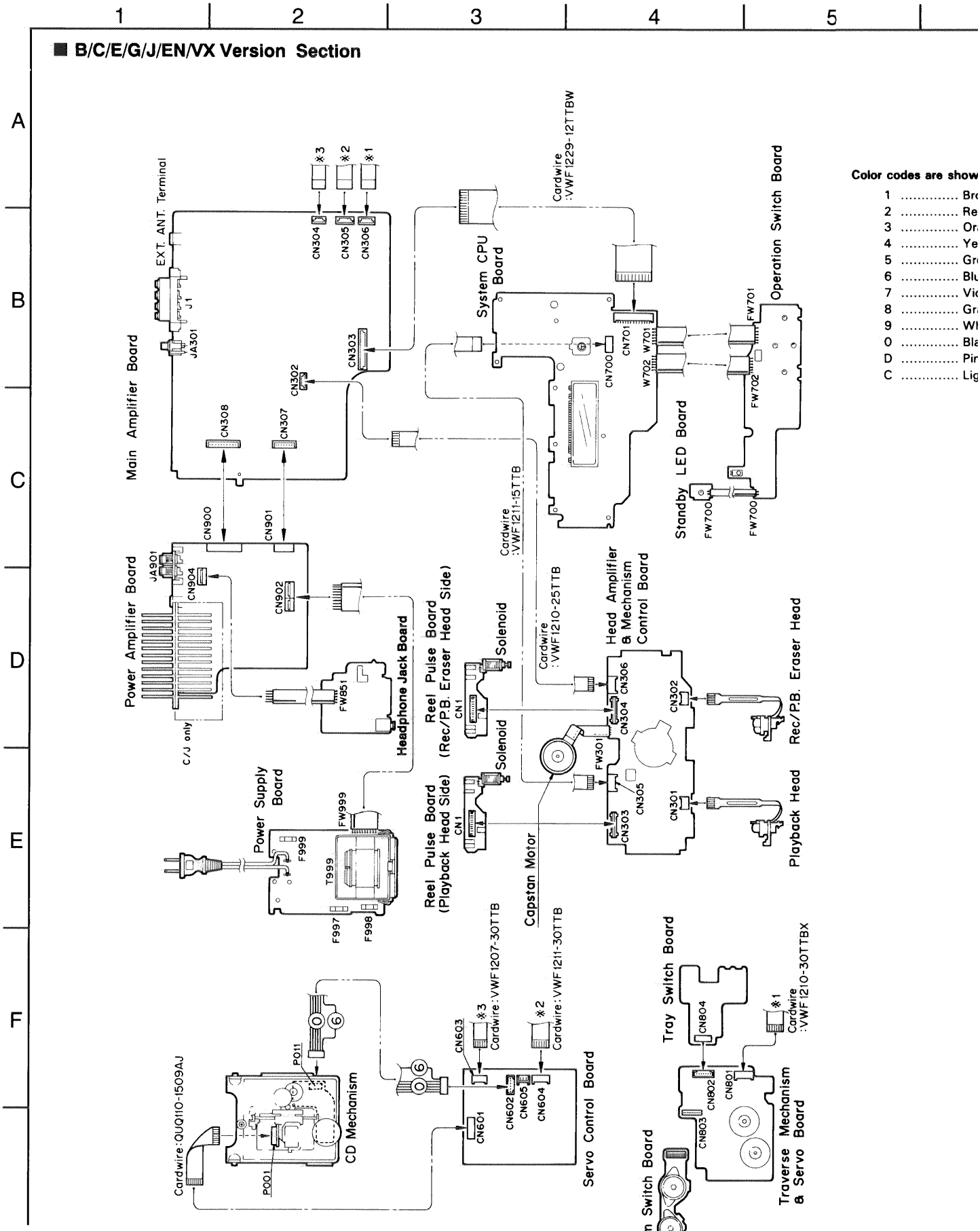

Fig.8-1

6 | 7 | 8 | 9 | 10

■ A/UB/US/UP/UT/U Version Section

are shown below.
..... Brown
..... Red
..... Orange
..... Yellow
..... Green
..... Blue
..... Violet
..... Gray
..... White
..... Black
..... Pink
..... Light Blue

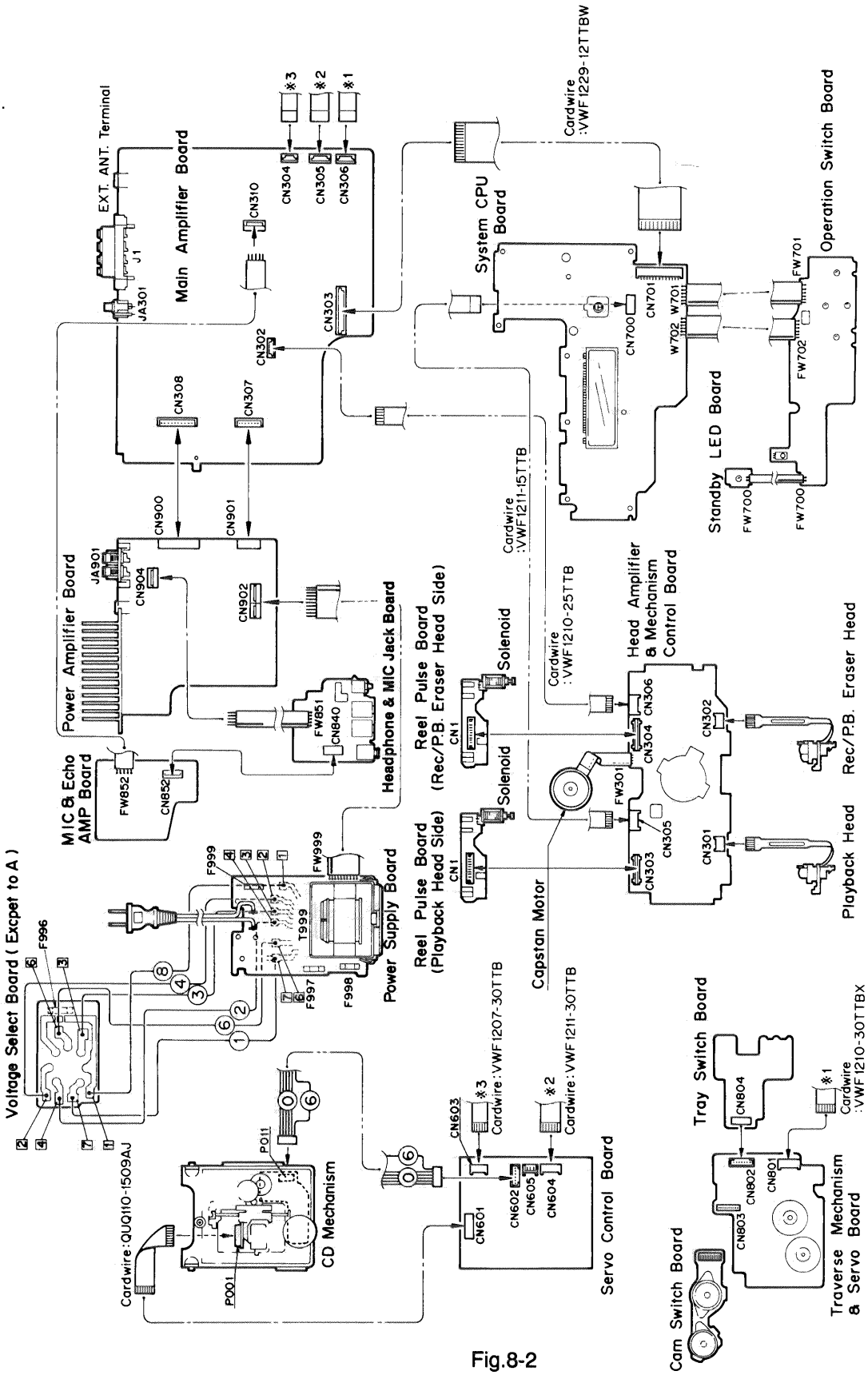

Fig.8-2

9.Analytic Drawing and Parts List

■ **Enclosure Assembly Part : Block No. M1 (B/E/G/EN/VX Version)**

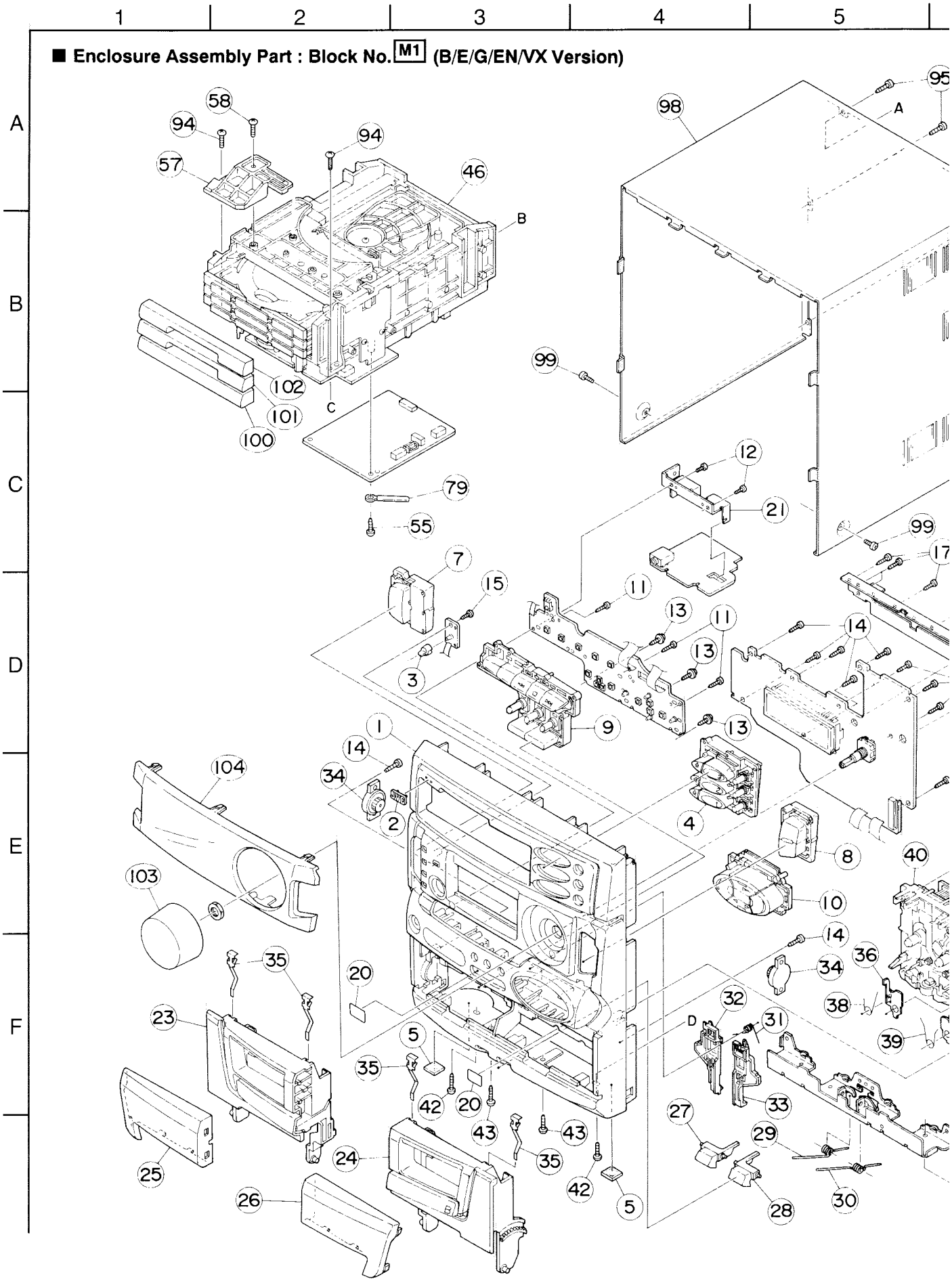

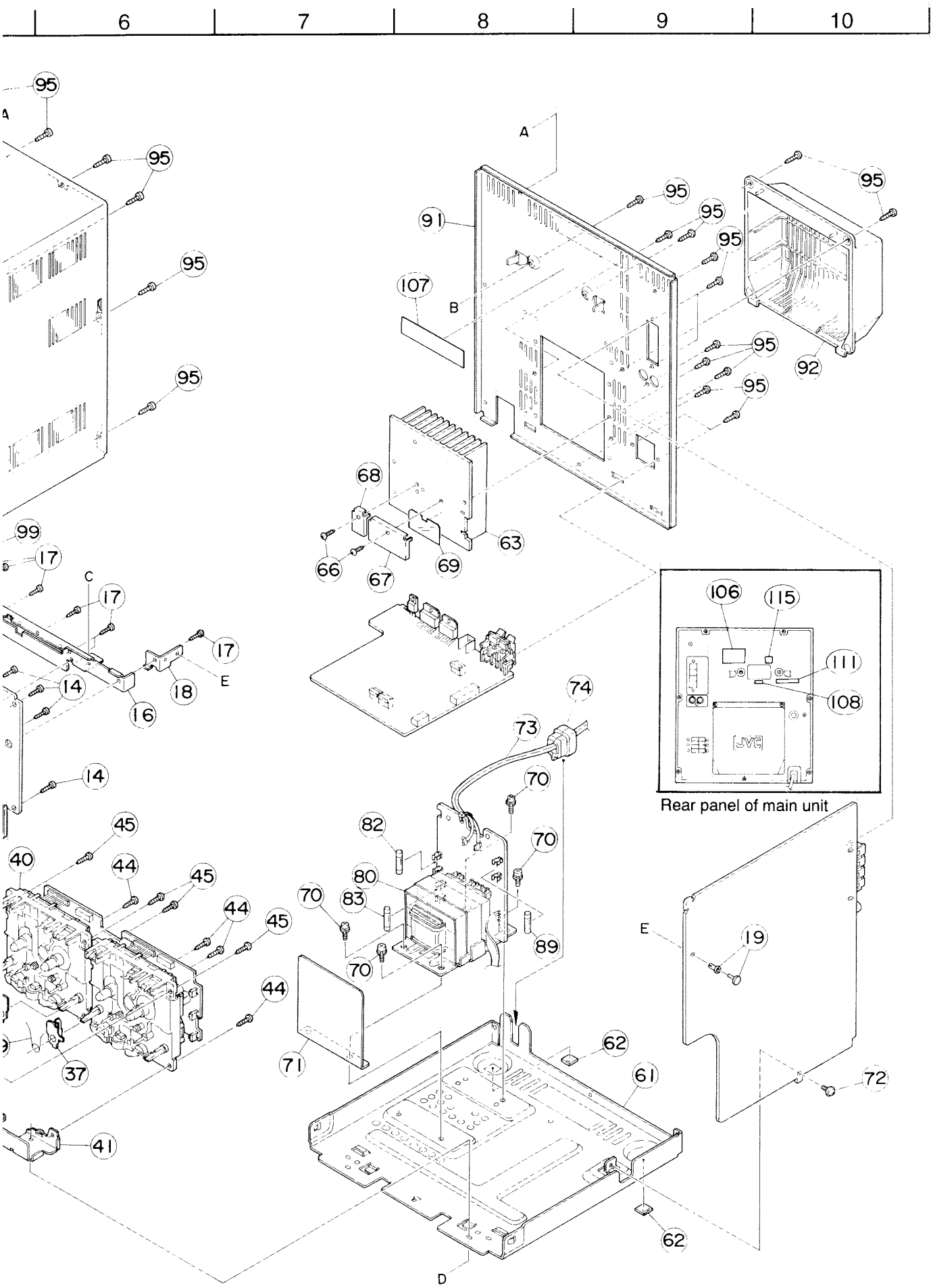
6
7
8
9
10
95
A
91
107
B
92
68
63
66
67
69
99
17
C
14
16
18
E
106
115
111
108
Rear panel of main unit
74
73
70
82
80
83
89
45
40
44
37
41
71
62
61
72
19
D

■ Enclosure Assembly Part : Block No. M1 (A/C/J/UB/US/UT/UP/U Version)

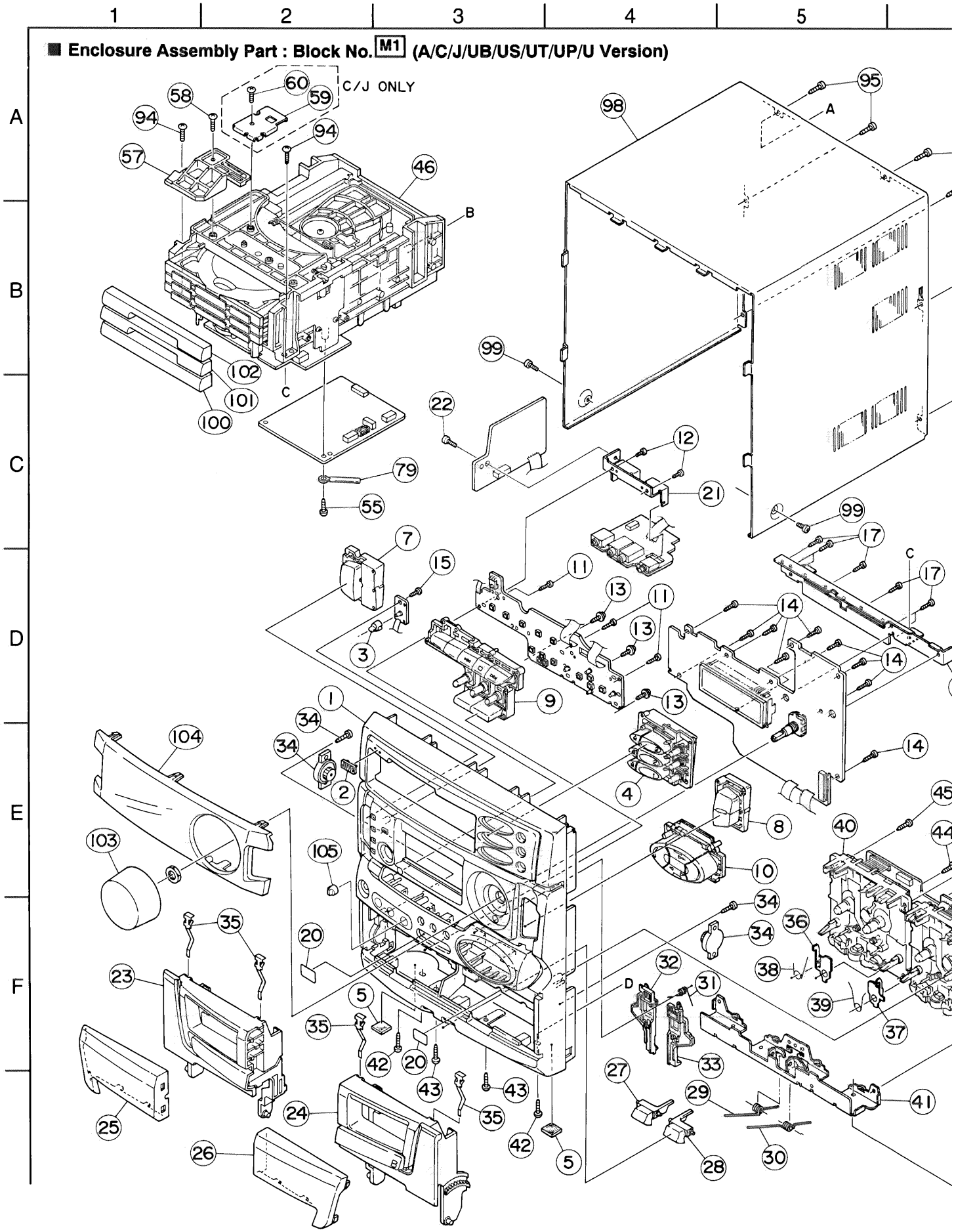

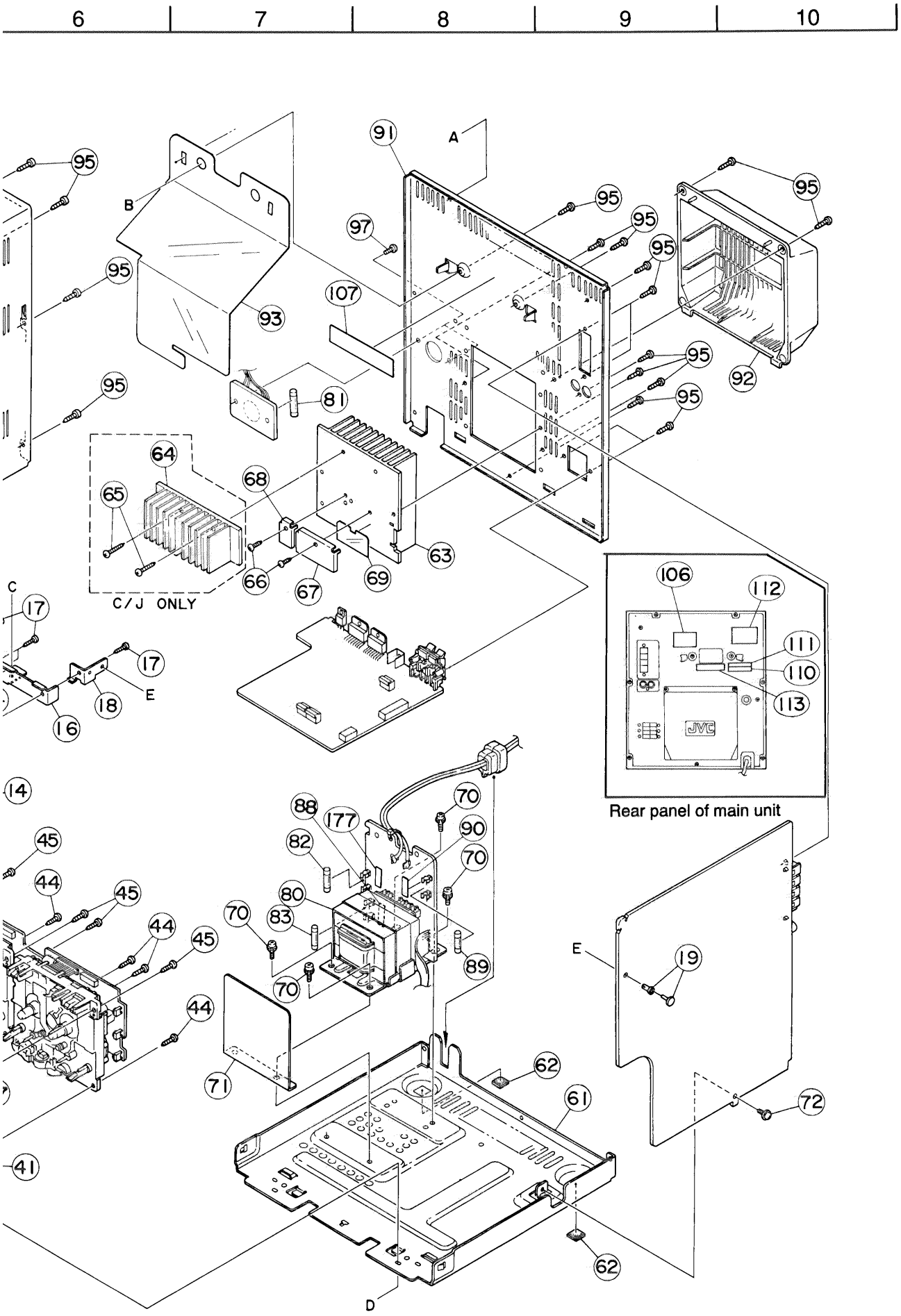
6
7
8
9
10
A
B
C
D
E
C/J ONLY
Rear panel of main unit
JVC

■ Enclosure Assembly Parts List

BLOCK NO. M1MM

A	REF.	PARTS NO.	PARTS NAME	REMARKS	QTY	SUFFIX	CLR
	1	FMJC1015-002	FRONT PANEL		1	A,VX	
		FMJC1015-002	FRONT PANEL		1	B,E,EN,G	
		FMJC1015-001UL	FRONT PANEL		1	C,J	
		FMJC1015-003	FRONT PANEL		1	U,UB,UP,US,U	
	2	E406971-001SM	JVC MARK		1		
	3	FMJK4013-001	STANDEBY INDICA		1		
	4	FMXP2009-001	CD BOTTON		1		
	5	E75896-001	SPACER		2		
	7	FMXP2004-005	POWER BUTTON		1	A,VX	
		FMXP2004-005	POWER BUTTON		1	B,E,EN,G	
		FMXP2004-004	POWER BUTTON		1	C,J	
		FMXP2004-004	POWER BUTTON		1	U,UB,UP,US,U	
	8	FMXP3017-002	SOUND BUTTON		1		
	9	FMXP2003-001	CONTROL BUTTON		1		
	10	FMXP2010-00A	FUN.BUTT.ASSY		1		
	11	SDSF2608Z	SCREW		3		
	12	SDSF2610Z	TAPPING SCREW		2		
	13	GBSF2608Z	SCREW		3		
	14	SDSF2608Z	SCREW		11		
	15	SDSF2608Z	SCREW		1		
	16	E309495-002SM	STAY BKT		1		
	17	SDSF2608Z	SCREW		8		
	18	FMKL4011-001	BRACKET		1		
	19	FMYH4004-001	PLASTIC RIVET		1		
	20	E69777-003	REF PLATE		2		
	21	FMKL4014-001	PHONE BRACKET		1		
	22	SBST3006Z	TAPPING SCREW		1	U,UB,UP,US,U	
	23	FMJT2004-001	CASS HOLDER(L)		1		
	24	FMJT2004-002	CASS HOLDER(R)		1		
	25	FMJK2003-001	CASS LENS(L)		1		
	26	FMJK2003-002	CASS LENS(R)		1		
	27	FMXP3018-001	EJECT BUTTON(A)		1		
	28	FMXP3019-001	EJECT BUTTON(B)		1		
	29	FMKW4009-001	HOLDER SPRING A		1		
	30	FMKW4010-001	HOLDER SPRING B		1		
	31	FMKW4011-001	SPRING		1		
	32	FMKS3002-001	EJECT LEVER (A)		1		
	33	FMKS3003-001	EJECT LEVER (B)		1		
	34	VYH7779-00B	DUMPER ASS'Y		2		
	35	VKY4180-001	CASSETTE SPRING		4		
	36	FMKL4012-003	EJECT SAFETY(A)		1		
	37	FMKL4013-001	EJECT SAFETY(B)		1		
	38	FMKW4007-001	SPRING (A)		1		
	39	FMKW4008-001	SPRING (B)		1		
	40	----------	C. MECHA ASS'Y		1		
	41	FMKL2002-001	HOLDER BRACKET		1		
	42	SBSG3010Z	T.SCREW		2		
	43	SBSG3010Z	T.SCREW		2		
	44	SBSG3010Z	T.SCREW		4		
	45	SBSF3010Z	SCREW		4		
	46	---------	CHANGER MECHA A		1		
	55	SBSF3008Z	SCREW		1		
	57	E309662-001	DISC STOPPER		1		
	58	SBSF3008Z	SCREW		1		
	59	FMKL4008-001	LOD STOPPER		1	C,J	

BLOCK NO. M1MM

A	REF.	PARTS NO.	PARTS NAME	REMARKS	QTY	SUFFIX	CLR
	60	SBSF3008Z	TAPPING SCREW		1	C,J	
	61	FMKL1004-002	CHASSIS BASE		1		
	62	E75896-006	FELT SPACER		2		
	63	FMMH3005-001	HEAT SINK		1	A,VX	
		FMMH3005-001	HEAT SINK		1	B,E,EN,G	
		FMMH3005-002	HEAT SINK		1	C,J	
		FMMH3005-001	HEAT SINK		1	U,UB,UP,US,U	
	64	FMMH3007-002	HEAT SINK		1	C,J	
	65	SBSG3014CC	T.SCREW		2		
	66	SBSG3014CC	SCREW		2		
	67	FMKL4007-001	BRACKET		1		
	68	FMKL4015-001	BRACKET		1		
	69	FMPK4003-001	MICA SHEET		1		
	70	E65389-002	SPECIAL SCREW		4		
	71	FMMA4003-001	TRANS.SHIELD		1		
	72	GBST3006Z	SCREW		1		
	73	QMP25F0-244	POWER CORD		1	A	
		QMP5530-0085BS	POWER CORD		1	B,UB	
		QMP1480-200L	POWER CORD		1	C,J	
		QMP39E0-200	POWER CORD		1	E,EN,G,US,VX	
		QMP7520-200	POWER CORD		1	U,UT	
		EMP7000-200	POWER CORD		1	UP	
	74	QHS3771-108BS	CORD STOPPER		1	B	
		QHS3771-108	CORD STTPPER		1	C,J,VX	
		QHS3771-108	CORD STOPPER		1	A,E,EN,G	
		QHS3771-108	CORD STOPPER		1	U,UB,UP,US,U	
	79	VKZ4001-110	WIRE HOLDER		1		
	80	FMTP66M8-65A	POWER TRANS	T999	1	A,VX	
		FMTP66A8-77A	POWER TRANS	T999	1	C,J	
		FMTP66M8-65A	POWER TRANS	T999	1	B,E,EN,G	
		FMTP66U8-65A	POWER TRANS	T999	1	U,UB,UP,US,U	
	81	QMF51E2-R80SBS	FUSE	T996	1	U,UB,UP,US,U	
	82	QMF51E2-1R25	FUSE	F997	1	A,VX	
		QMF51N2-1R25J1	FUSE	F997	1	C,J	
		QMF51E2-1R25	FUSE	F997	1	B,E,EN,G	
		QMF51E2-1R25	FUSE	F997	1	U,UB,UP,US,U	
	83	QMF51E2-1R25	FUSE	F998	1	A,VX	
		QMF51N2-1R25J1	FUSE	F998	1	C,J	
		QMF51E2-1R25	FUSE	F998	1	B,E,EN,G	
		QMF51E2-1R25	FUSE	F998	1	U,UB,UP,US,U	
	88	VND4003-068	FUSE LABEL	FL998	1	C,J	
	89	QMF51E2-R80SBS	FUSE	F999	1	A,VX	
		QMF51N2-2R0J1	FUSE	F999	1	C,J	
		QMF51E2-R80SBS	FESE	F999	1	B,E,EN,G	
		QMF51E2-1R6J1	FUSE	F999	1	U,UB,UP,US,U	
	90	FMND4004-005	FESE LABEL	FL999	1	C,J	
		VND4003-073	FUSE LABEL	FL999	1	U,UB,UP,US,U	
	91	FMJC1016-008KP	REAR PANEL		1	A	
		FMJC1016-005	REAR PANEL		1	C,J	
		FMJC1016-007	REAR PANEL		1	B,E,EN,G	
		FMJC1016-006	REAR PANEL		1	U,UB,US,UT	
		FMJC1016-010KP	REAR PANEL		1	UP	
		FMJC1016-009	REAR PANEL		1	VX	
	92	E207356-001SM	REAR COVER		1	A,VX	

BLOCK NO. M1MM

⚠	REF.	PARTS NO.	PARTS NAME	REMARKS	QTY	SUFFIX	CLR
		E207356-002SM	REAR COVER		1	C,J	
		E207356-001SM	REAR COVER		1	B,E,EN,G	
		E207356-001SM	REAR COVER		1	U,UB,UP,US,U	
	93	FMMA3001-001	PROTECTOR SHEET		1	C,J	
	94	SBSG3008Z	T.SCREW		2		
	95	E73273-003	SPECIAL SCREW		20		
	97	E73273-003	SCREW		2	U,UB,US,UT	
	98	FMJC1013-005	METAL COVER		1		
	99	SDSG3006M	T.SCREW		2		
	100	FMJD2003-001	CD FITTING		1		
	101	FMJD2003-002	CD FITTING		1		
	102	FMJD2003-003	CD FITTING		1		
	103	FMXL3001-001	M.VOL KNOB		1		
	104	FMJK2002-001	WINDOW SCREEN		1		
	105	E408765-004SM	MIC.KNOB		1	U,UB,UP,US,U	
	106	E70891-001	CLASS 1 LABEL		1	A,VX	
		E70891-001	CLASS 1 LABEL		1	B,E,EN,G	
		E70891-001	CLASS 1 LABEL		1	U,UB,UP,US,U	
	107	E406709-001	LASER CAUTION		1	A,VX	
		E406709-001	LASER CAUTION		1	B,E,EN,G	
		E406709-001	LASER CAUTION		1	U,UB,UP,US,U	
	108	E408919-001	BEAB LABEL		1	B	
		FMND4008-001	SEMKO LABEL		1	E,EN,G	
	110	E307570-001	NUMBER LABEL		1	J	
	111	----------	NUMBER LABEL		1	A,C,VX	
		----------	NUMBER LABEL		1	B,E,EN,G	
		----------	NUMBER LABEL		1	U,UB,UP,US,U	
	112	EMND3007-005	RETING LABEL		1	UT	
	113	LE40210-001A	CAUTION LABEL		1	UT	
	114	FMND3008-002	RATING LABEL		1	U	
	115	E409392-001	GOST LABEL		1	VX	
	117	VND4003-068	FUSE LABEL	FL997	1	C,J	

■ **CD Traverse Mechanism Part : Block No.** M2

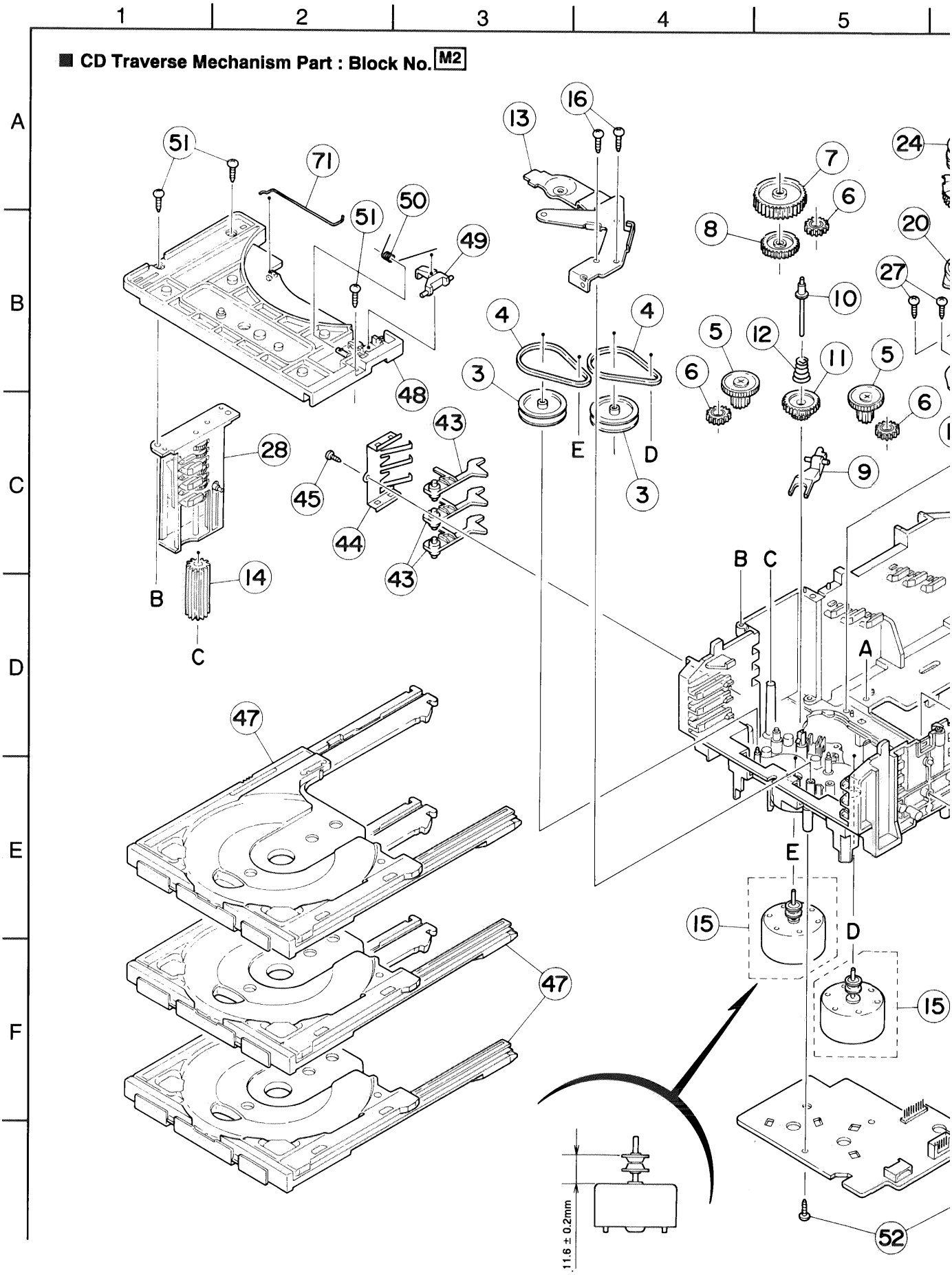

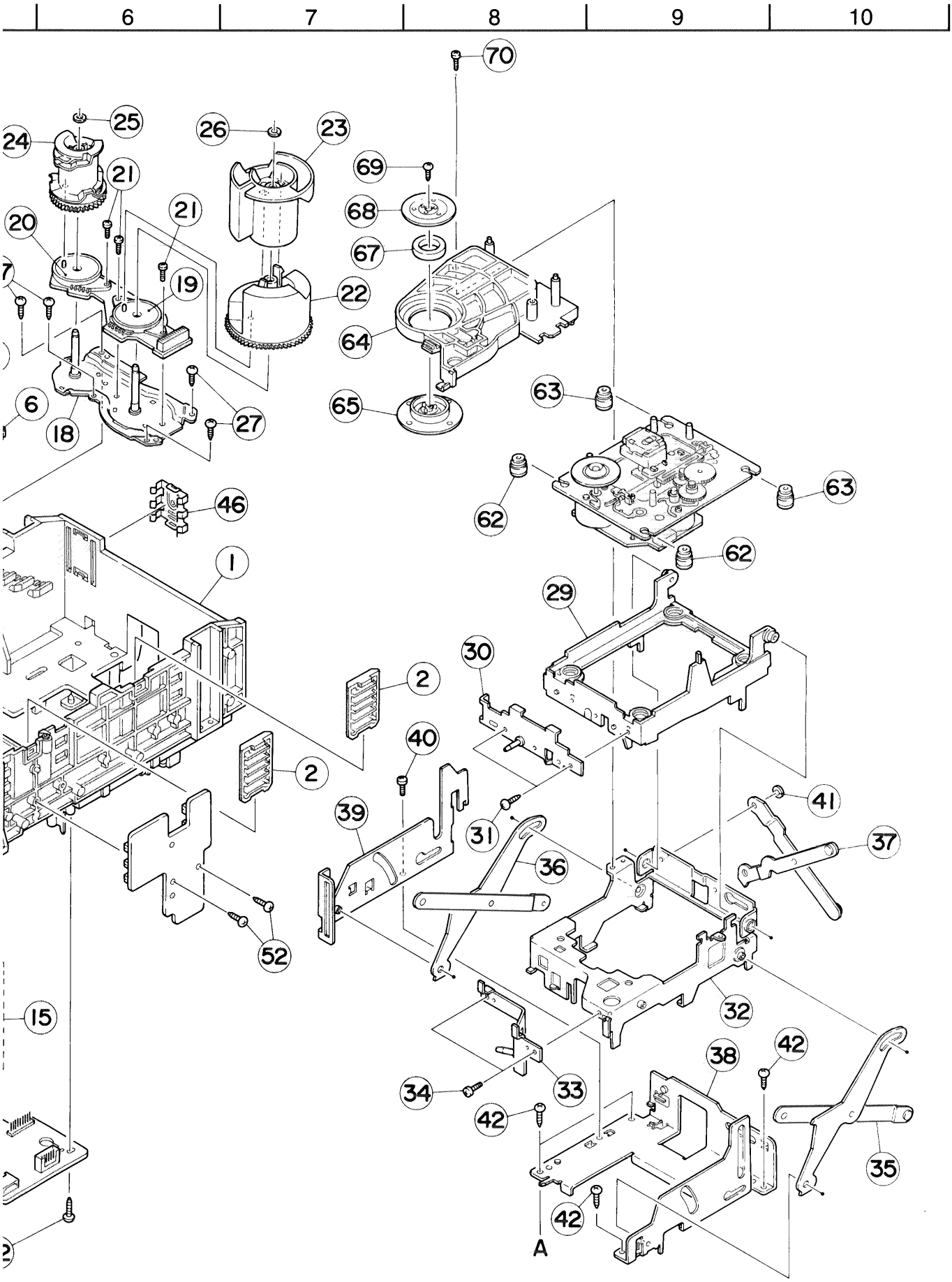
6
7
8
9
10
70
25
24
26
23
69
21
68
21
20
67
19
22
64
6
18
27
65
63
62
63
46
62
1
29
30
2
40
2
41
39
31
37
36
52
32
15
42
38
34
33
42
35
42
A

■ CD Traverse Mechanism Parts List

BLOCK NO. M2MM

⚠	REF.	PARTS NO.	PARTS NAME	REMARKS	QTY	SUFFIX	CLR
	1	VKS1144-003	AHASSIS		1		
	2	VKS3698-003	TRAY GUIDE		2		
	3	VKS5532-003	PULLEY GEAR		2		
	4	VKB3000-164	BELT		2		
	5	VKS5505-003	GEAR B		2		
	6	VKS5506-002	GEAR C		3		
	7	VKS5507-002	CROSS GEAR U		1		
	8	VKS5508-002	CROSS GEAR L		1		
	9	VKS5510-003	SELECT LEVER		1		
	10	VKH5769-001	S.G.SHAFT		1		
	11	VKS5511-002	SELECT GEAR		1		
	12	VKW5155-003	COMP.SPRING	FOR SELECT GEAR	1		
	13	VKM3846-002	GEAR BRACKET		1		
	14	VKS5509-002MM	CYLINDER GEAR		1		
	15	MSN5D257A-SA2	D.C.MOTOR		2		
	16	DPSP2616Z	SCREW	FOR MOTOR	2		
	18	VKM3825-00AMM	C.G.BASE ASS'Y		1		
	19	VKZ3172-00ASS	CAM SW. R ASS'Y		1		
	20	VKZ3173-00ASS	CAM SW. L ASS'Y		1		
	21	SPST2606Z	SCREW	FOR CAM SW.	3		
	22	VKS2263-002MM	CAM R1		1		
	23	VKS2264-002MM	CAM R2		1		
	24	VKS2265-002MM	CAM GEAR L		1		
	25	WDL316050	SLIT WASHER	FOR CAM GEAR L	1		
	26	WDL316050	SLIT WASHER		1		
	27	SBSF2608Z	SCREW	FOR C.GEAR BASE	4		
	28	VKS3702-00FMM	DRIVE UNIT		1		
	29	VKS2247-004	MECHA HOLDER A		1		
	30	VKL7767-00B	BRACKET ASS'Y		1		
	31	SBSF2606Z	SCREW	FOR BRACKET	2		
	32	VKM3860-00A	M.HOLDER B AS'Y		1		
	33	VKL7802-00C	M.HOLDER C AS'Y		1		
	34	SDST2604Z	SCREW	FOR M.HOLDER C	2		
	35	VKL7810-00A	LIFTER ASS'Y R		1		
	36	VKL7811-00A	LIFTER ASS'Y L		1		
	37	VKL7812-00A	LIFTER ASS'Y H		1		
	38	VKL2732-002	LIFTER BASE		1		
	39	VKM3823-001	LIFTER BRACKET		1		
	40	SDST2604Z	SCREW		1		
	41	WDL266035-2	SLIT WASHER		1		
	42	SBSF2608Z	SCREW		4		
	43	VKS5514-002MM	LOCK LEVER		3		
	44	VKY3133-002MM	RETURN SPRING		1		
	45	SBSF2608Z	SCREW	FOR RETURN SP.	1		
	46	VKY3134-003MM	CLICK SPRING		1		
	47	VKS2252-00DMM	TRAY ASS'Y		3		
	48	VKS2250-003	TOP BRACKET		1		
	49	VKS5515-002	S.TRAY STOPPER		1		
	50	VKW5156-004	TORSION SPRING		1		
	51	SBSF2608Z	SCREW		3		
	52	SBSF2608Z	SCREW		4		
	62	FMYH4003-002	INSULATOR		2		
	63	FMYH4003-001	INSULATOR		2		
	64	VKS3703-00FMM	CLAMPER		1		
	65	----------	CD MECHA ASS'Y		1		
	70	SPST2606Z	TAPPING SCREW		1		
	71	VKW5187-001	ROD		1		

■ Cassette Mechanism Part : Block No. M3

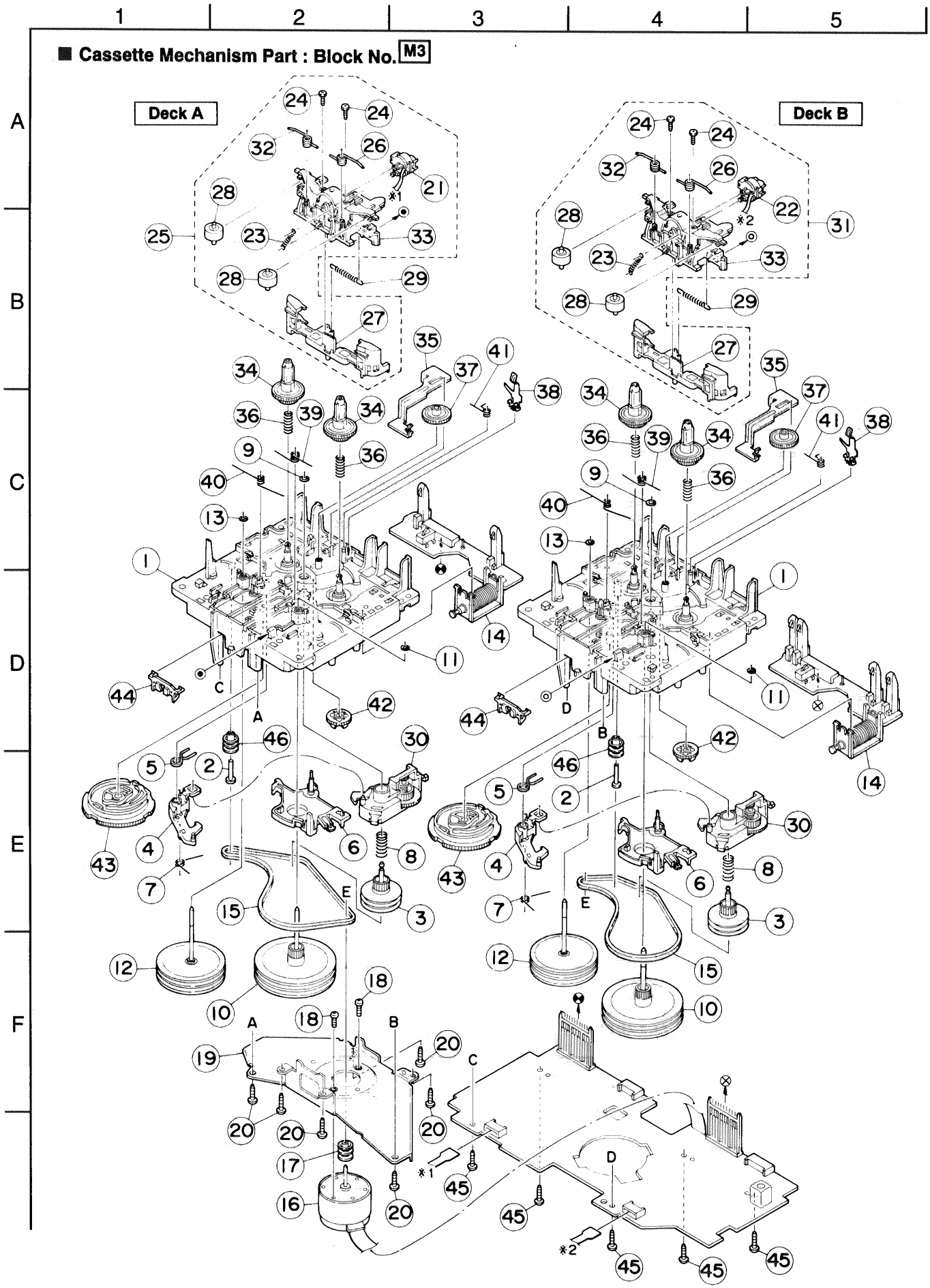

■ Cassette Mechanism Parts List

BLOCK NO. M3MM

⚠	REF.	PARTS NO.	PARTS NAME	REMARKS	QTY	SUFFIX	CLR
	1	VKS1165-00D	CHASSIS B. ASSY		2		
	2	VKH5786-002	SHAFT		2		
	3	VKR3199-001	MAIN PULLEY		2		
	4	VKS3785-001MM	FR ARM		2		
	5	VKW5284-002	SWING SPRING		2		
	6	VKS2278-001	TRIGGER ARM		2		
	7	VKW5301-001	FR SPRING		2		
	8	VKW5266-001	ELEVATOR SPRING		2		
	9	WDL214025	WASHER		2		
	10	VKF3205-00B	F.WHEEL ASSY(R)		2		
	11	WDL183425	SLIT WASHER		2		
	12	VKF3207-00B	F.WHEEL ASSY(L)		2		
	13	WDL173525-6	SLIT WASHER		2		
	14	VGP2401-00A	DC SOLENOID		2		
	15	VKB3000-174	CAPSTAN BELT(B)		2		
	16	MSI-5U2LWA	D.C.MOTOR ASS'Y		1		
	17	VKR4761-001	MOTOR PULLEY		1		
	18	SPSP2604Z	SCREW		2		
	19	VKM3907-001	JOINT BRACKET		1		
	20	SBSF2608Z	SCREW		6		
	21	VGH0424-037	HED ASS'Y	PB SIDE	1		
	22	VGH0425-544	HEAD ASS'Y	R/P & E SIDE	1		
	23	VKW5302-001	HEAD SPRING		2		
	24	VKZ4730-001	SPECIAL SCREW		4		
	25	VKS2279-00C	HEAD MOUNT ASSY		1		
	26	VKW5299-001	PIN.ROL.SP.(R)		2		
	27	VKS2277-005	DIRECTION LEVER		2		
	28	VKP4233-00A	PINCH ROL. ASSY		4		
	29	VKW5285-001	RETURN SPRING		2		
	30	VKS3786-00D	CLUTCH ASSY		2		
	31	VKS2275-00C	HEAD MOUNT ASSY		1		
	32	VKW5300-001	PIN.ROL.SP.(L)		2		
	33	VKS1167-001	HEAD MOUNT BASE		2		
	34	VKS2274-002	REEL GEAR		4		
	35	VKM3906-002	PLAY SW.LEVER		2		
	36	VKW5286-002	B.T. SPRING		4		
	37	VKS5559-001	PLAY IDLE GEAR		2		
	38	VKY3149-001	CASSETTE SP.		2		
	39	VKW5279-001	HEAD BASE SP(R)		2		
	40	VKW5280-001	HEAD BASE SP(L)		2		
	41	VKW5296-001	EARTH SPRING		2		
	42	VKS5560-001	FR IDLE GEAR		2		
	43	VKS1166-001	CONTROL CAM		2		
	44	VKS5577-001	FPC HOLDER		2		
	45	SBSF2608Z	TAPPING SCREW	FOR PWB	5		
	46	VKR4749-002	IDLE PULLEY		2		

■ CD Mechanism Part : Block No. M4

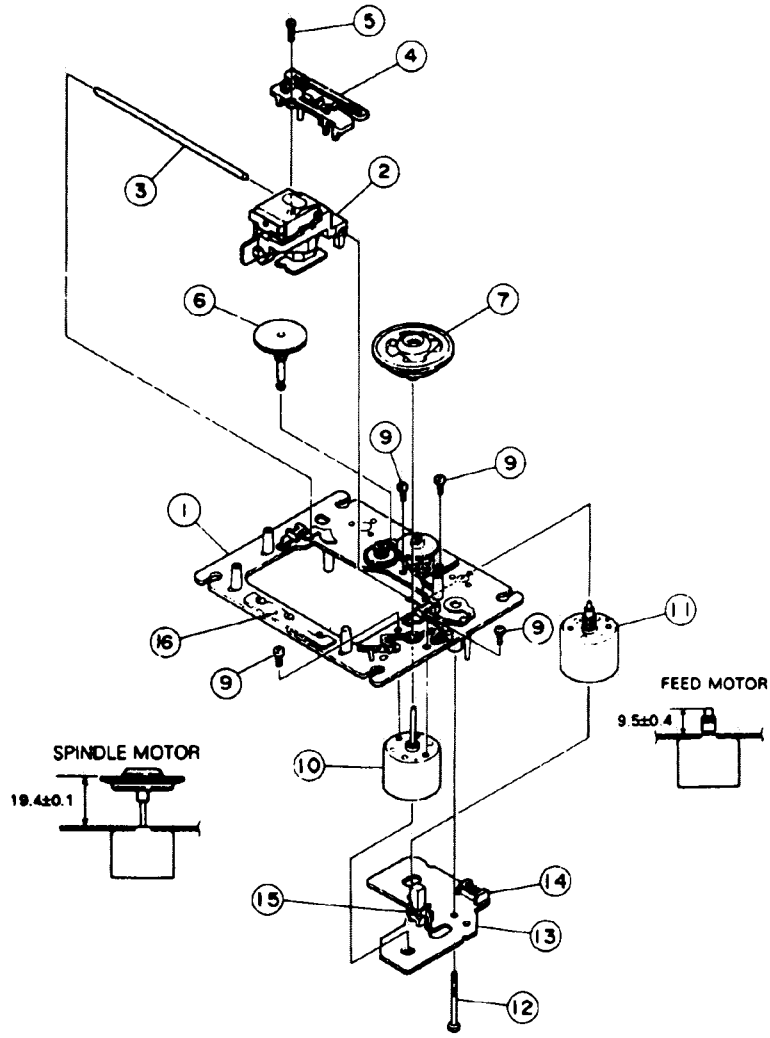

Fig.9-8

■ CD Mechanism Parts List

BLOCK NO. M4MM

⚠	REF.	PARTS NO.	PARTS NAME	REMARKS	QTY	SUFFIX	CLR
	1	EPB-002A	BASE ASS'Y		1		
	2	OPTIMA-6S	PIC-UP		1		
	3	E406777-001	GUIDE SHAFT		1		
	4	E307746-001	CD RACK		1		
	5	SDSF2006Z	SCREW	CD LACK ASS'Y	1		
	6	EPB-003A	MECHA GIAR		1		
	7	E75807-301	CD T.TABLE ASSY		1		
	9	SDSP2003N	SCREW	FOR MOTOR	4		
	10	E406783-001	SP MOTOR	SPINDL MOTOR	1		
	11	E406784-001SA	DC MOTOR ASS'Y	FEED MOTOR	1		
	12	E75832-001	S.SCREW	M.REAF SWITCH	1		
	13	EMW10190-001	BOARD	LEAF SWITCH	1		
	14	EMV5109-006B	6P PLUG ASSY		1		
	15	ESB1100-005	LEAF SWITCH		1		
	16	E407212-001	DAMPER		1		

10.Block Diagram

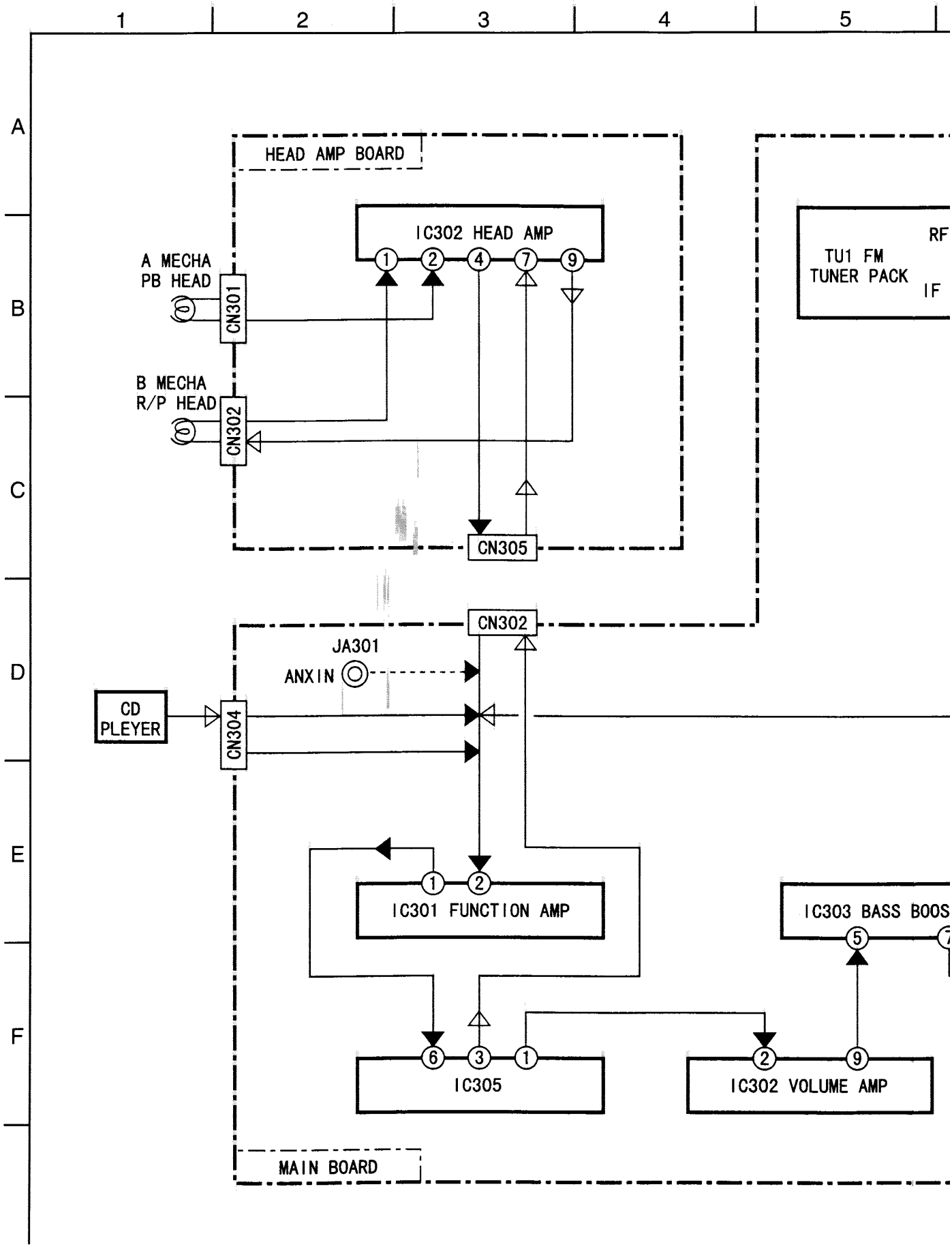

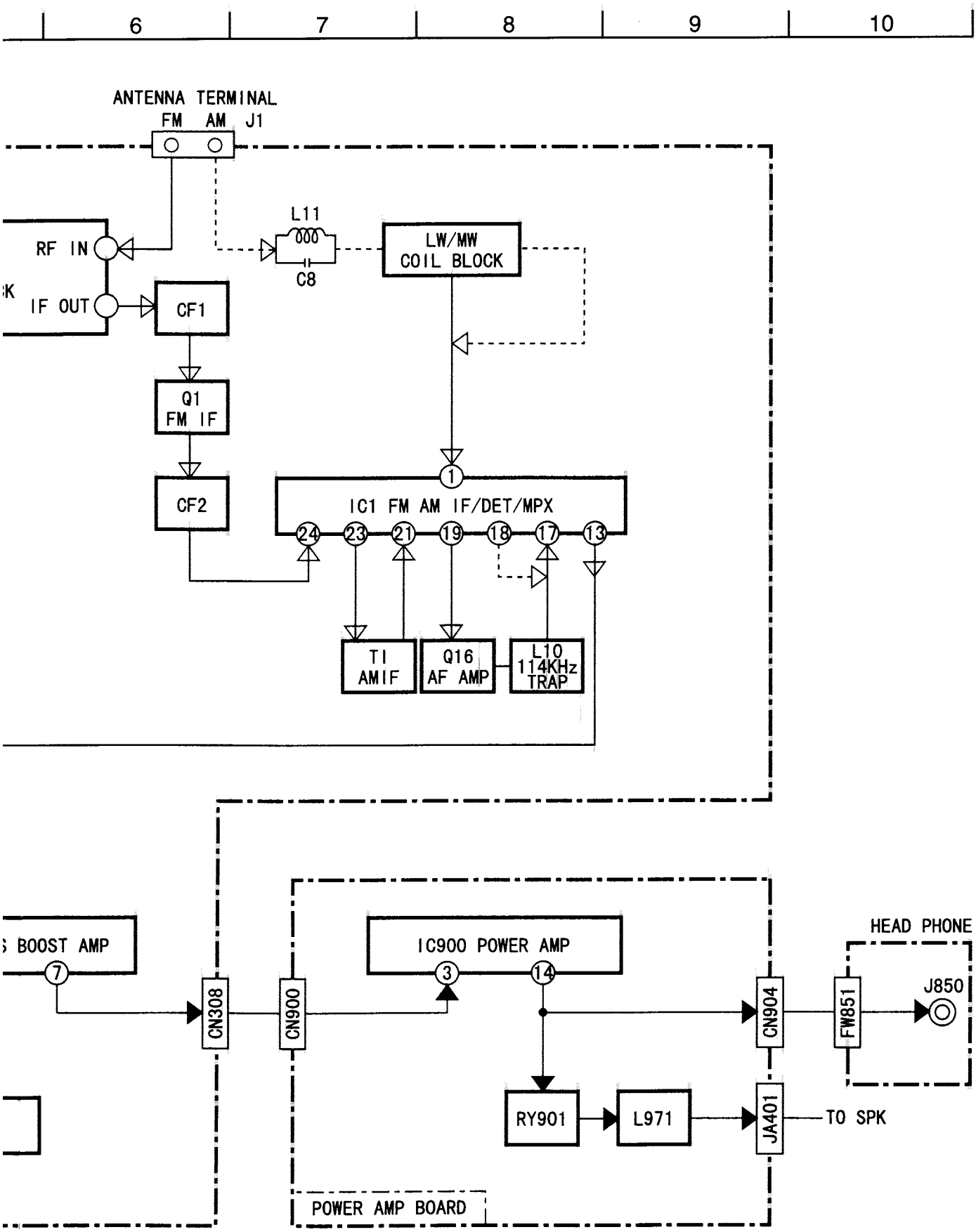
6
7
8
9
10
ANTENNA TERMINAL
FM AM J1
L11
C8
LW/MW
COIL BLOCK
RF IN
IF OUT
CF1
Q1
FM IF
CF2
IC1 FM AM IF/DET/MPX
1
24
23
21
19
18
17
13
TI
AMIF
Q16
AF AMP
L10
114KHz
TRAP
BOOST AMP
7
CN308
CN900
IC900 POWER AMP
3
14
CN904
FW851
HEAD PHONE
J850
RY901
L971
JA401
TO SPK
POWER AMP BOARD

11.Standard Schematic Diagram

■ Head Amplifier & Mechanism Control Circuit : Drawing No.VDH1033-001PV

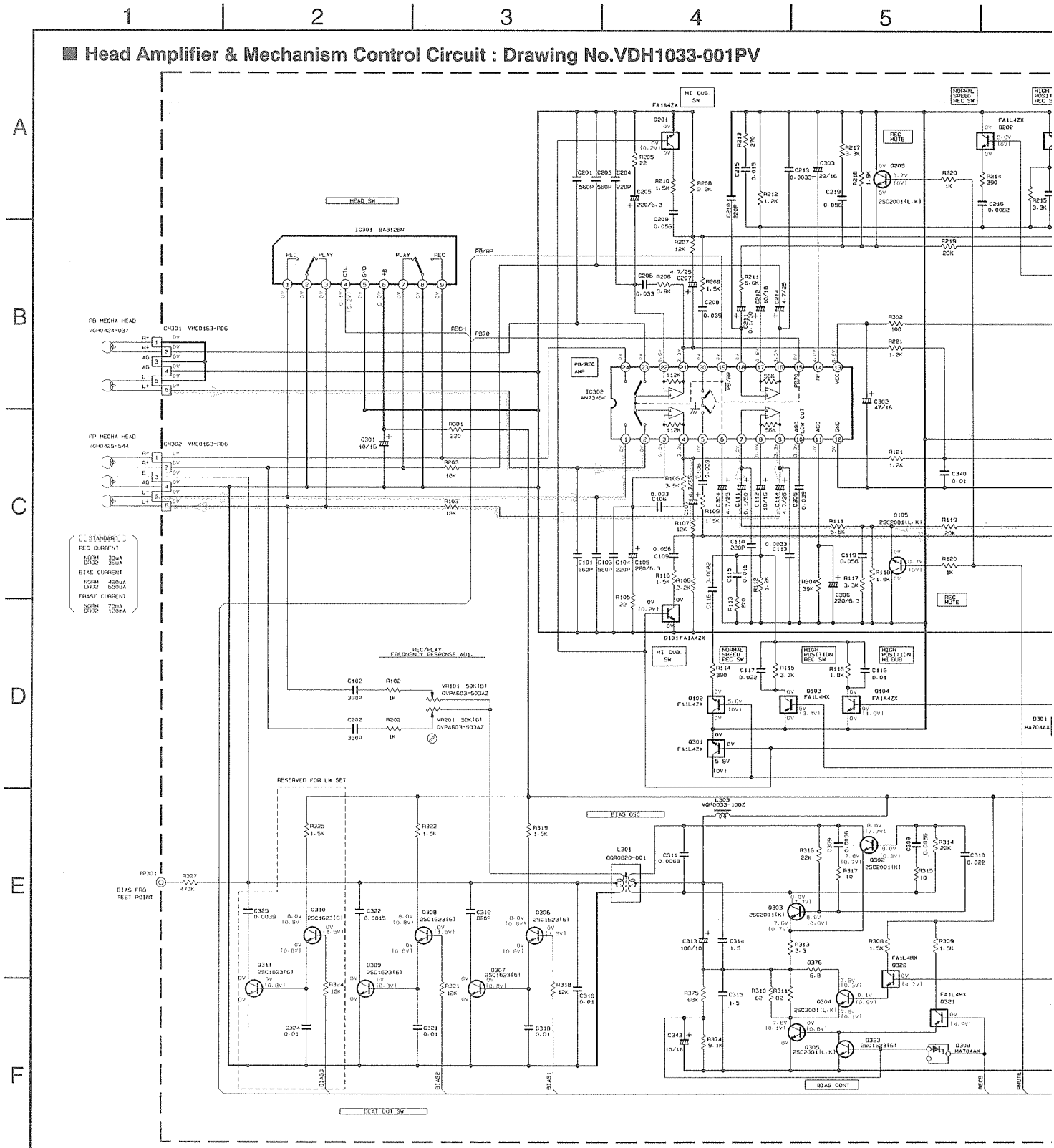

NOTES

1. VOLTAGES ARE DC-MEASURED WITH A DIGITAL VOLT METER OR OSCILLOSCOPE WITHOUT INPUT SIGNAL. [ ] IS INVERT MODE
2. UNLESS OTHERWISE SPECIFIED
   ALL RESISTANCE VALUES ARE IN OHM(Ω).
   ALL CAPACITORS ARE CERAMIC CAPACITOR
   ALL CAPACITANCE VALUES ARE IN μF(P=pF).
   ALL INDUCTANCE VALUES ARE IN μH(m=mH).
   ALL E.CAPACITORS ARE SHOWN IN THE FORM OF CAPACITANCE (μF)/RATED VOLTAGE (V).
   PP PLYPROPYLENE CAPACITOR

TABLE 1.DIGITAL TR LIST

PART.NO	CONSTRUCTION	REF.NO			
FN1L4M	47K 47K	Q318	FA1F4M	22K 22K	Q317
FA1A4Z	10K	Q101/Q201 Q104/Q204	FA1L4M	47K 47K	Q103/Q203 Q319 Q320/Q321/Q322
FA1L4Z	47K	Q102/Q202 Q301			

Note : VDH103301pv(/s/G)

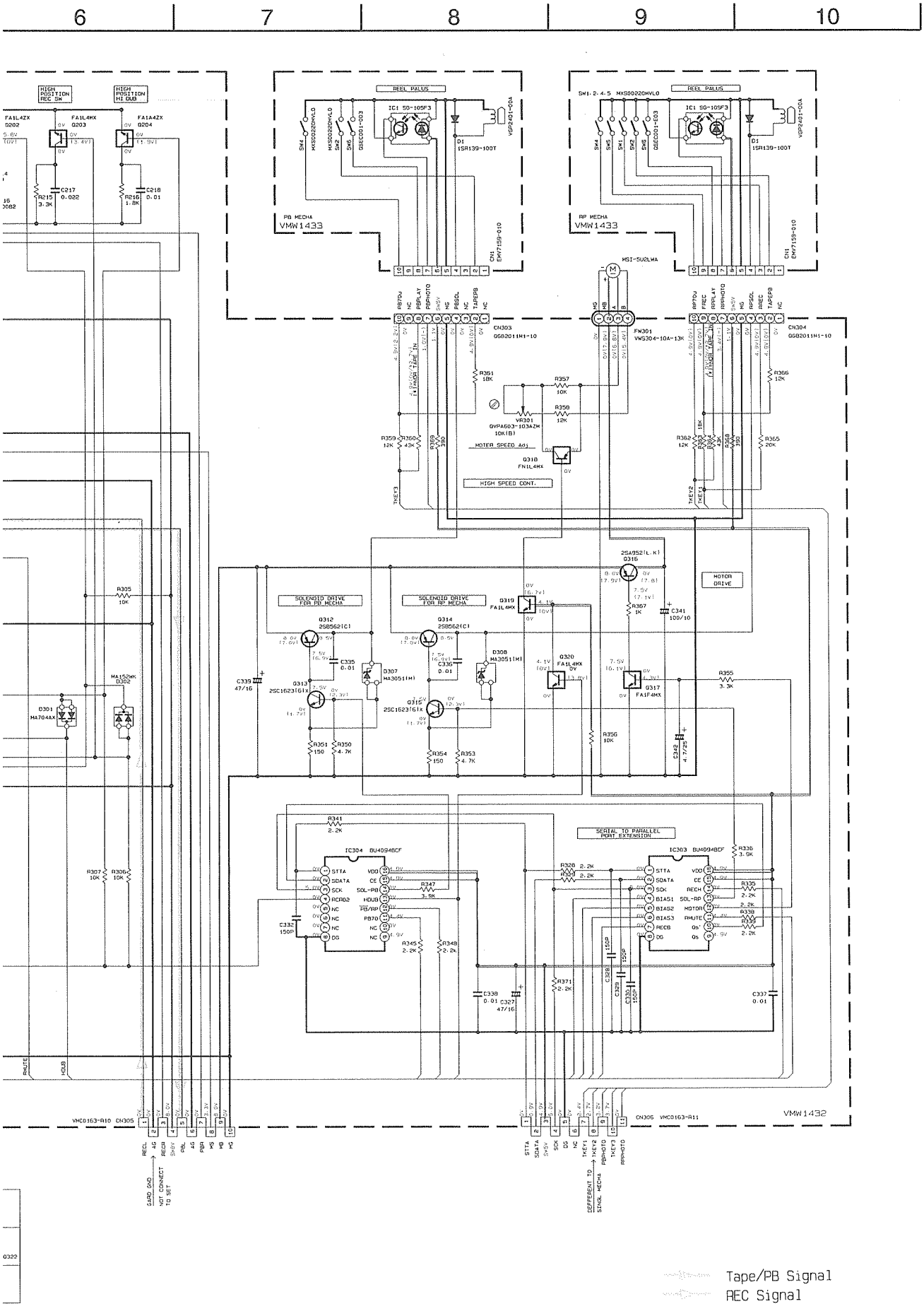
6
7
8
9
10
HIGH POSITION REC SW
HIGH POSITION HI DUB
REEL PULUS
PB MECHA
VMW1433
RP MECHA
VMW1433
CN303
CN304
MOTOR SPEED Adj
HIGH SPEED CONT.
SOLENOID DRIVE FOR PB MECHA
SOLENOID DRIVE FOR RP MECHA
MOTOR DRIVE
SERIAL TO PARALLEL PORT EXTENSION
IC304 BU4094BCF
IC303 BU4094BCF
CN305 VMC0163-R10
CN306 VMC0163-R11
VMW1432
Tape/PB Signal
REC Signal
+B Line

CD Servo Control Circuit : Drawing No.FMDH9002-001CW

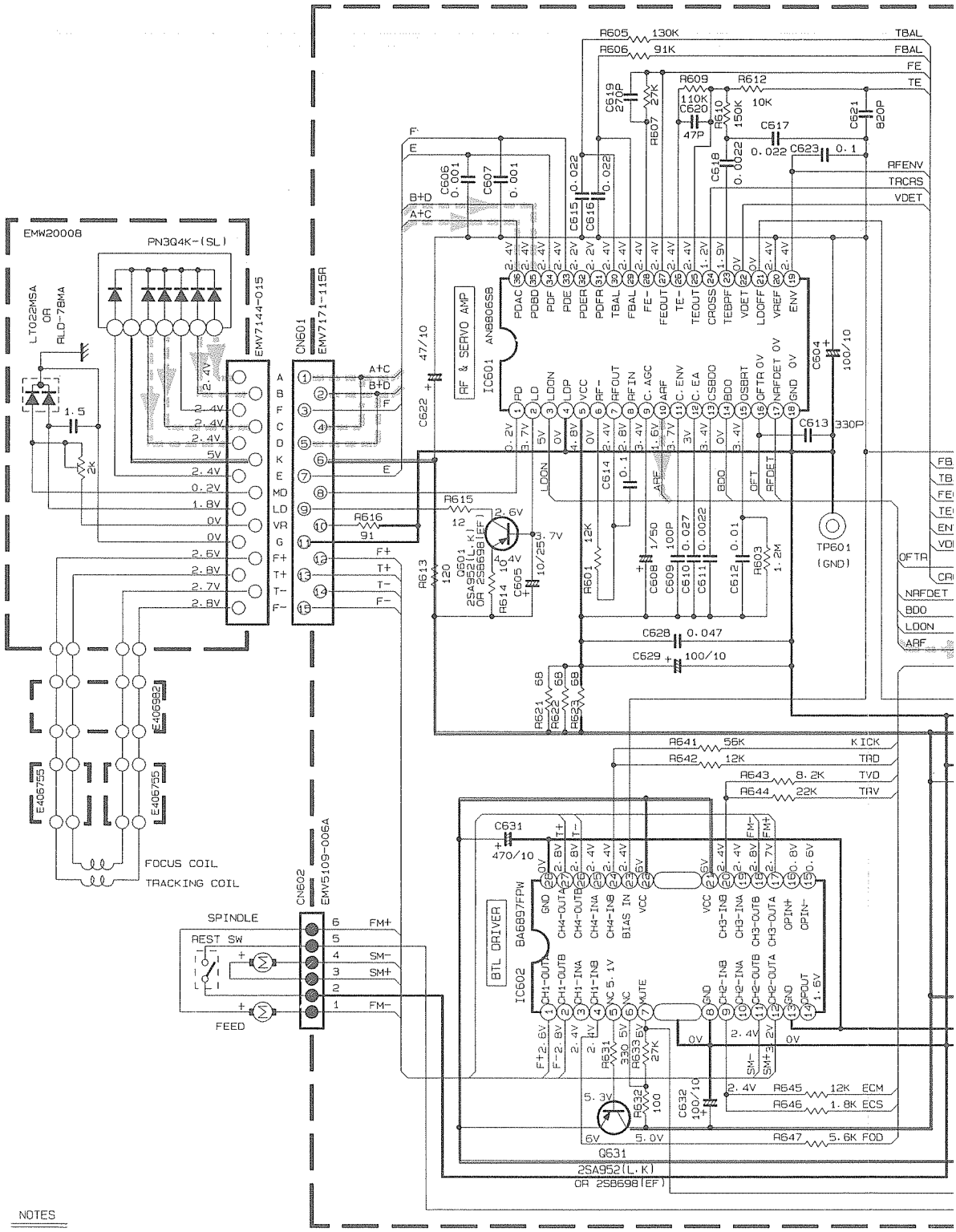

NOTES

1. VOLTAGES ARE DC-MEASURED WITH A DIGITAL VOLT METER
2. UNLESS OTHERWISE SPECIFIED, RESISTORS ARE 1/6W ±5% CARBON RESISTOR.
   ALL RESISTANCE VALUES ARE IN OHM(Ω).
   ALL CAPACITORS ARE CERAMIC CAPACITOR OR MYLAR CAPACITOR.
   ALL CAPACITANCE VALUES ARE IN μF(P=pF).
   ALL E.CAPACITORS ARE SHOWN IN THE FORM OF CAPACITANCE (μF)/RATED VOLTAGE (V).

CD Digital signal

CD Analogue signal

+B Line

Note : FMDH9002001CW(/s/g/)

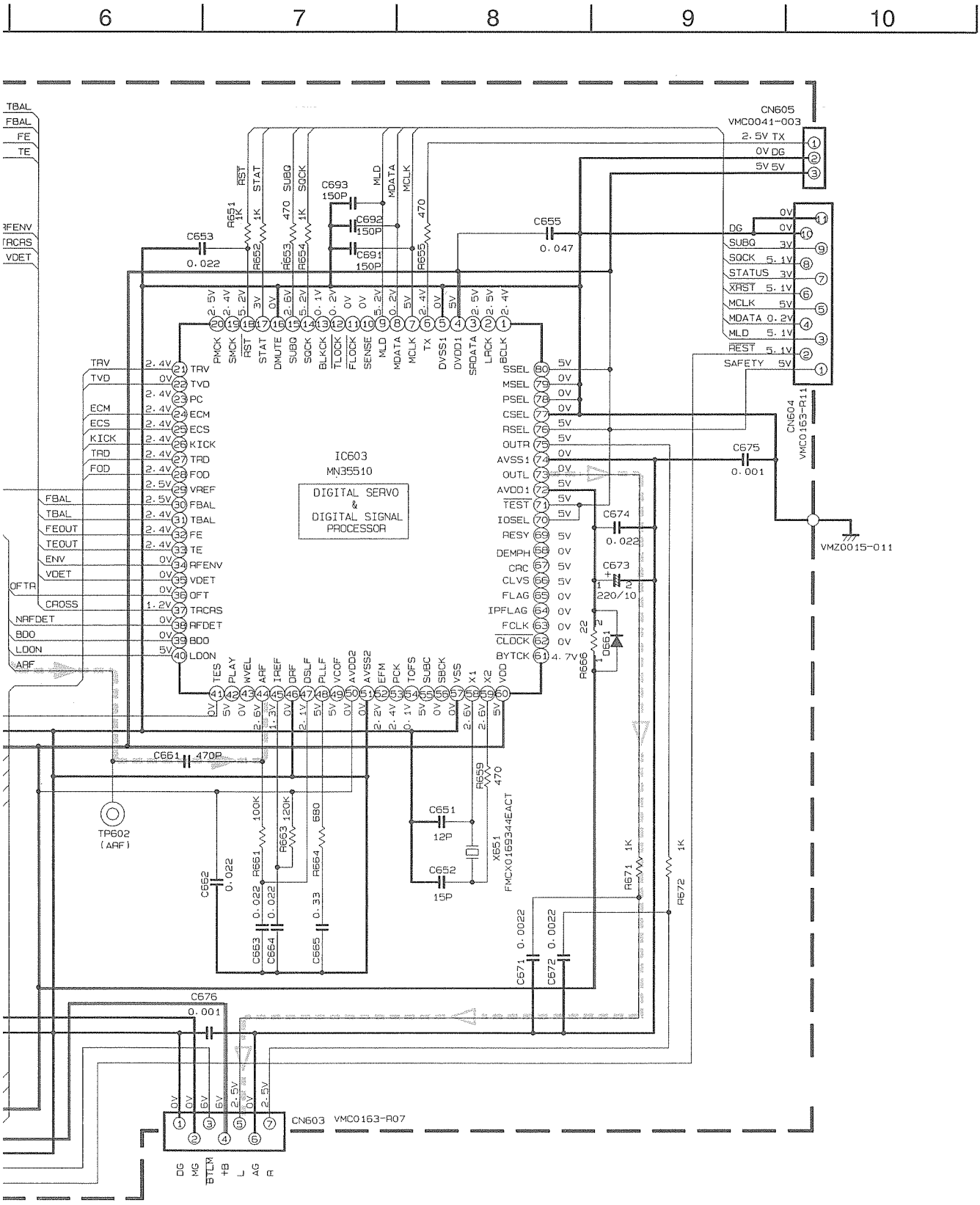
6
7
8
9
10
IC603
MN35510
DIGITAL SERVO
&
DIGITAL SIGNAL
PROCESSOR
CN605
VMC0041-003
CN604
VMC0163-R11
VMZ0015-011
CN603
VMC0163-R07
TP602
(ARF)
X651
FMCX0169344EACT
C653
0.022
C655
0.047
C675
0.001
C674
0.022
C673
220/10
C661
470P
C651
12P
C652
15P
C676
0.001
C671
0.0022
C672
0.0022
R651
1K
R652
1K
R653
470
R654
1K
R655
470
R659
470
R661
100K
R663
120K
R664
680
R666
22
R671
1K
R672
1K
C693
150P
C692
150P
C691
150P
C662
0.022
C663
0.022
C664
0.022
C665
0.33
D661

■ Tuner Circuit : Drawing No.FMDH9002-005TW (B/E/EN/G Version)

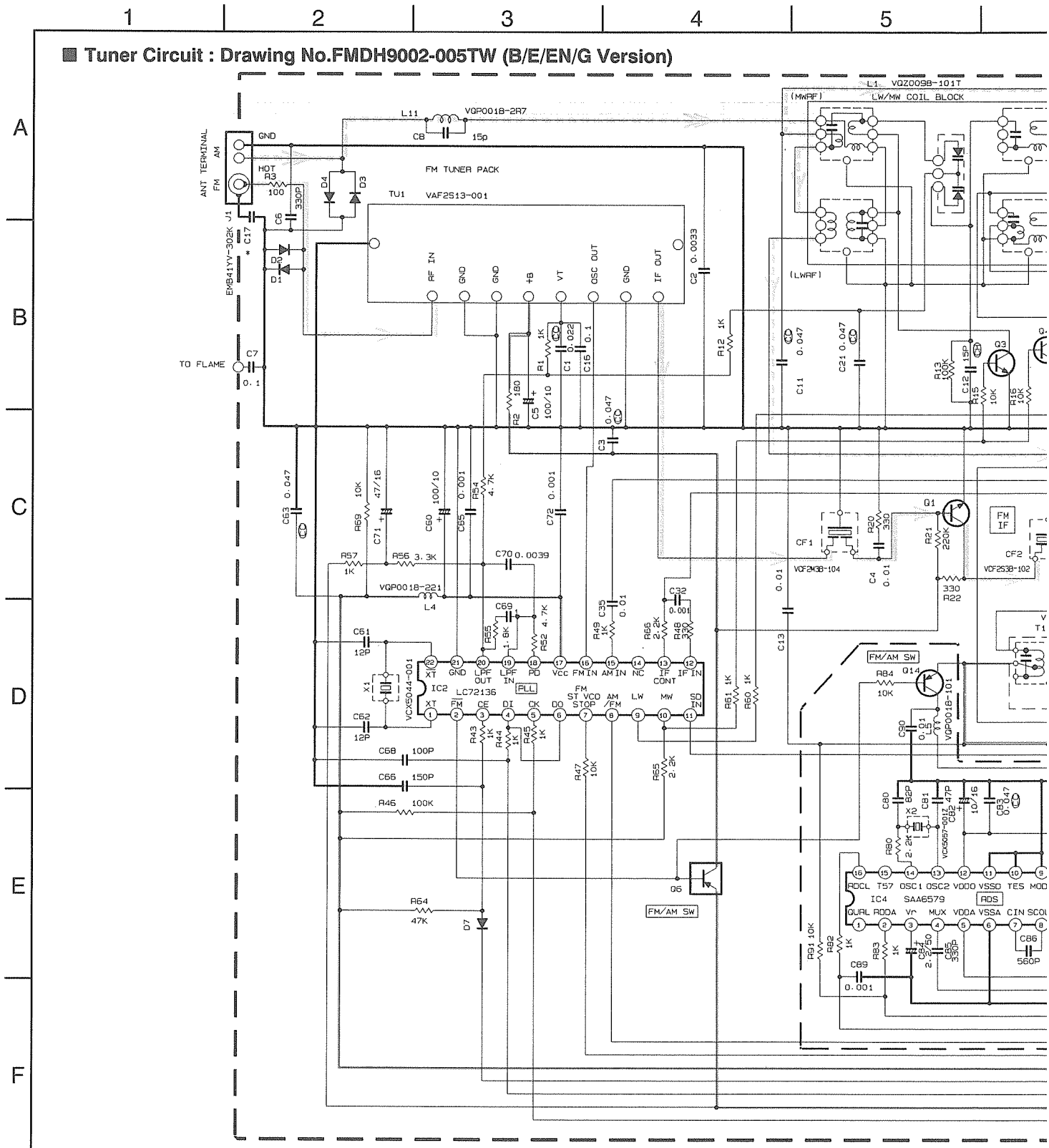

* MARK

LOC. \ MODEL	CA-D301T CA-D351TR	CA-D401T CA-D451TR	CA-D501T CA-D551TR
C17	0.01	0.001	0.001

	CONDITION PIN NO.	1	2	3	4	5	6	7	8	9	10	11	12	13	14	15	16	17	18	19	20	21	22	23	24
IC1	FM NO SIGNAL	2.0	0.5	0	2.0	5.2	5.2	0	0	0.2	5.2	5.2	1.0	1.0	4.6	3.8	3.8	1.4	0	1.3	1.1	2.0	2.0	5.2	2.0
	FM 60dB STEREO	2.0	0.5	0	2.0	5.2	5.2	1.1	0	0.2	0	0	1.0	1.0	4.5	4.1	3.9	1.4	0	1.2	1.1	2.0	2.0	5.2	2.0
	AM NO SIGNAL	2.0	0.5	0	2.0	5.0	5.2	0	0	0.2	5.2	5.2	1.0	1.0	4.8	2.2	0	1.4	1.4	1.5	1.6	2.0	2.0	5.2	2.0
IC2	FM NO SIGNAL	2.7	0	0	4.9	4.9	4.9	3.8	3.8	2.0	4.1	5.2	0	0	0	0	2.6	5.2	1.0	1.0	3.7	0	2.7		

Tr NO.	
PIN NO.	E
FM 87.5MHz NO SIGNAL	0
AM 522KHz NO SIGNAL	0
Tr NO.	
PIN NO.	E
AM 522KHz NO SIGNAL	2.
AM 144KHz NO SIGNAL	2.

Note : FMDH9002005TW(/s/g)

6 | 7 | 8 | 9 | 10

NOTES

1. VOLTAGES ARE DC-MEASURED WITH A DIGITAL VOLT METER.
2. ALL RESISTORS ARE 1/6W 5% CARBON RESISTOR.
3. ALL RESISTANCE VALUES ARE IN OHM(Ω).
4. ALL CAPASITANCE VALUES ARE IN μF(P=pF).
5. ALL E.CAPASITORS ARE SHOWN IN THE FORM OF CAPASITANCE (μF)/RATED VOLTAGE (V).
6. SI.DIODES(▷|) ARE ALL 1SS133T
7. PARTS NO. OF TRANSISTORS ARE AS FOLLOWS.
   Q1 2SC1923(Q) Q2.6 DTA114YS
   Q3.4.16 2SC2785
   Q14 2SA1175(HFE)-T
8. INSIDE OF DIGITAL TRANSISTORS ARE SHOWN AS FOLLOWS.

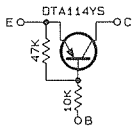

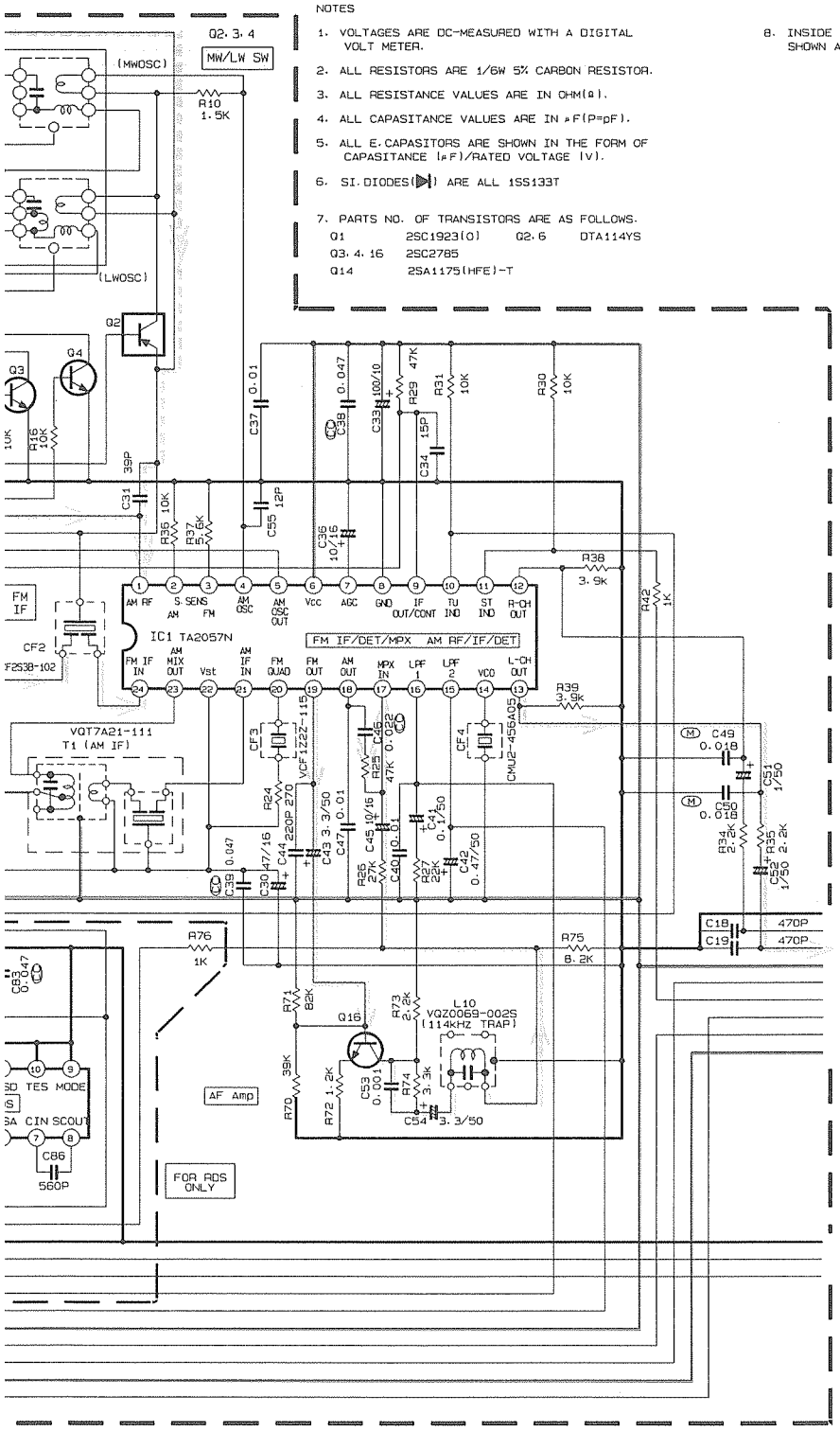

	Q1			Q5			Q16		
	E	C	B	E	C	B	E	C	B
) SIGNAL	0	8.3	0.8	9.8	9.7	0	1.0	3.5	1.6
SIGNAL	0	0	0	9.8	0	9.7	1.0	3.5	1.6
	Q2			Q3			Q4		
	E	C	B	E	C	B	E	C	B
SIGNAL	2.0	2.0	0.1	0	0	0.7	0	0	0.7
SIGNAL	2.0	2.0	2.0	0	0	0.1	0	0	0.1

FM Radio signal
MW Radio signal
LW Radio signal
+B Line

■ Tuner Circuit : Drawing No.FMDH9002-012TW (VX Version)

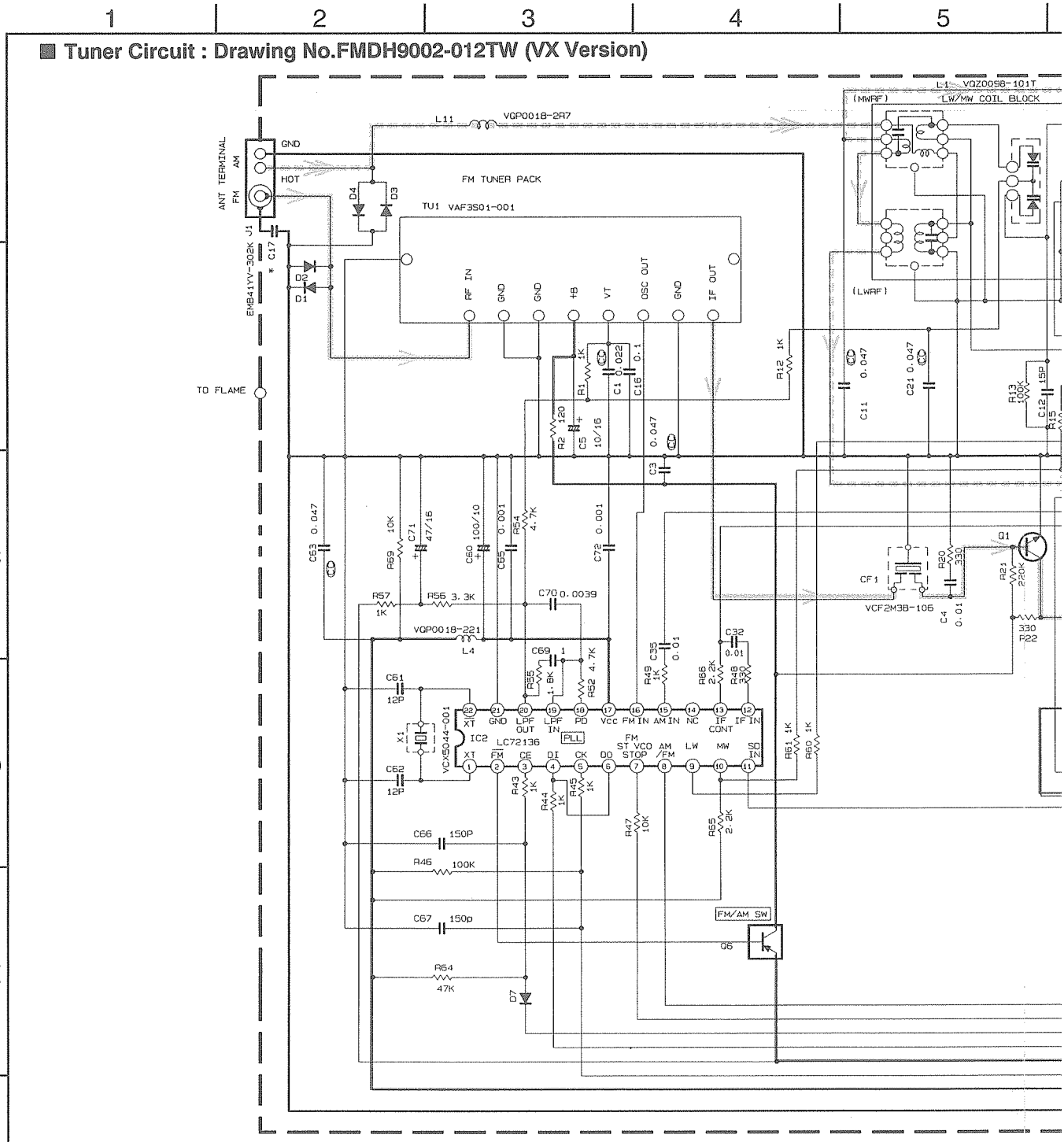

	CONDITION PIN NO.	1	2	3	4	5	6	7	8	9	10	11	12	13	14	15	16	17	18	19	20	21	22	23	24
IC1	FM NO SIGNAL	2.0	0.5	0	2.0	5.2	5.2	0	0	0.2	5.2	5.2	1.0	1.0	4.6	3.8	3.8	1.4	0	1.3	1.1	2.0	2.0	5.2	2.0
	FM 60dB STEREO	2.0	0.5	0	2.0	5.2	5.2	1.1	0	0.2	0	0	1.0	1.0	4.5	4.1	3.9	1.4	0	1.2	1.1	2.0	2.0	5.2	2.0
	AM NO SIGNAL	2.0	0.5	0	2.0	5.0	5.2	0	0	0.2	5.2	5.2	1.0	1.0	4.8	2.2	0	1.4	1.4	1.5	1.6	2.0	2.0	5.2	2.0
IC2	FM NO SIGNAL	2.7	0	0	4.9	4.9	4.9	3.8	3.8	2.0	4.1	5.2	0	0	0	0	2.6	5.2	1.0	1.0	3.7	0	2.7		

Tr N
PIN N
FM 87.5MHZ
AM 522KHZ N
Tr N
PIN N
AM 522KHZ N
AM 144KHZ N

* MARK

LOC. \ MODEL	CA-D301T	CA-D401T
C17	0.01	0.001

Note : FMDH9002012TW(/s/g)

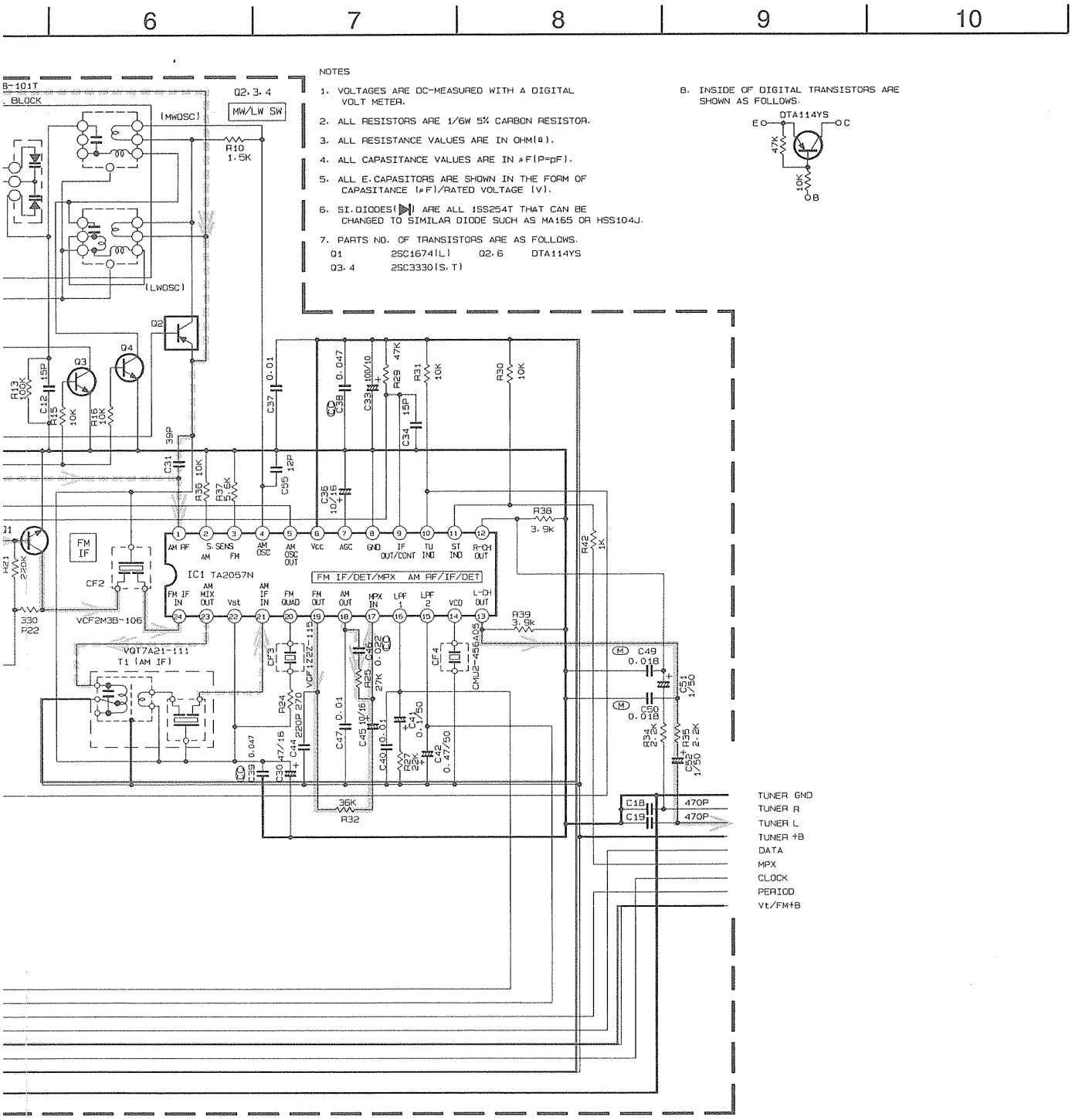

NOTES

1. VOLTAGES ARE DC-MEASURED WITH A DIGITAL VOLT METER.
2. ALL RESISTORS ARE 1/6W 5% CARBON RESISTOR.
3. ALL RESISTANCE VALUES ARE IN OHM(Ω).
4. ALL CAPASITANCE VALUES ARE IN μF(P=pF).
5. ALL E.CAPASITORS ARE SHOWN IN THE FORM OF CAPASITANCE (μF)/RATED VOLTAGE (V).
6. SI.DIODES(▶|) ARE ALL 1SS254T THAT CAN BE CHANGED TO SIMILAR DIODE SUCH AS MA165 OR HSS104J.
7. PARTS NO. OF TRANSISTORS ARE AS FOLLOWS.
   Q1 2SC1674(L) Q2, 6 DTA114YS
   Q3, 4 2SC3330(S, T)
8. INSIDE OF DIGITAL TRANSISTORS ARE SHOWN AS FOLLOWS.

Tr NO.	Q1			Q6					
PIN NO.	E	C	B	E	C	B	E	C	B
FM 87.5MHz NO SIGNAL	0	8.3	0.8	9.8	9.7	0			
AM 522KHz NO SIGNAL	0	0	0	9.8	0	9.7			
Tr NO.	Q2			Q3			Q4		
PIN NO.	E	C	B	E	C	B	E	C	B
AM 522KHz NO SIGNAL	2.0	2.0	0.1	0	0	0.7	0	0	0.7
AM 144KHz NO SIGNAL	2.0	2.0	2.0	0	0	0.1	0	0	0.1

FM Radio signal
AM Radio signal
LW Radio signal
+B Line

■ Tuner Circuit : Drawing No.FMDH9002-006TW (A/C/J/U/UB/UP/US/UT Version)

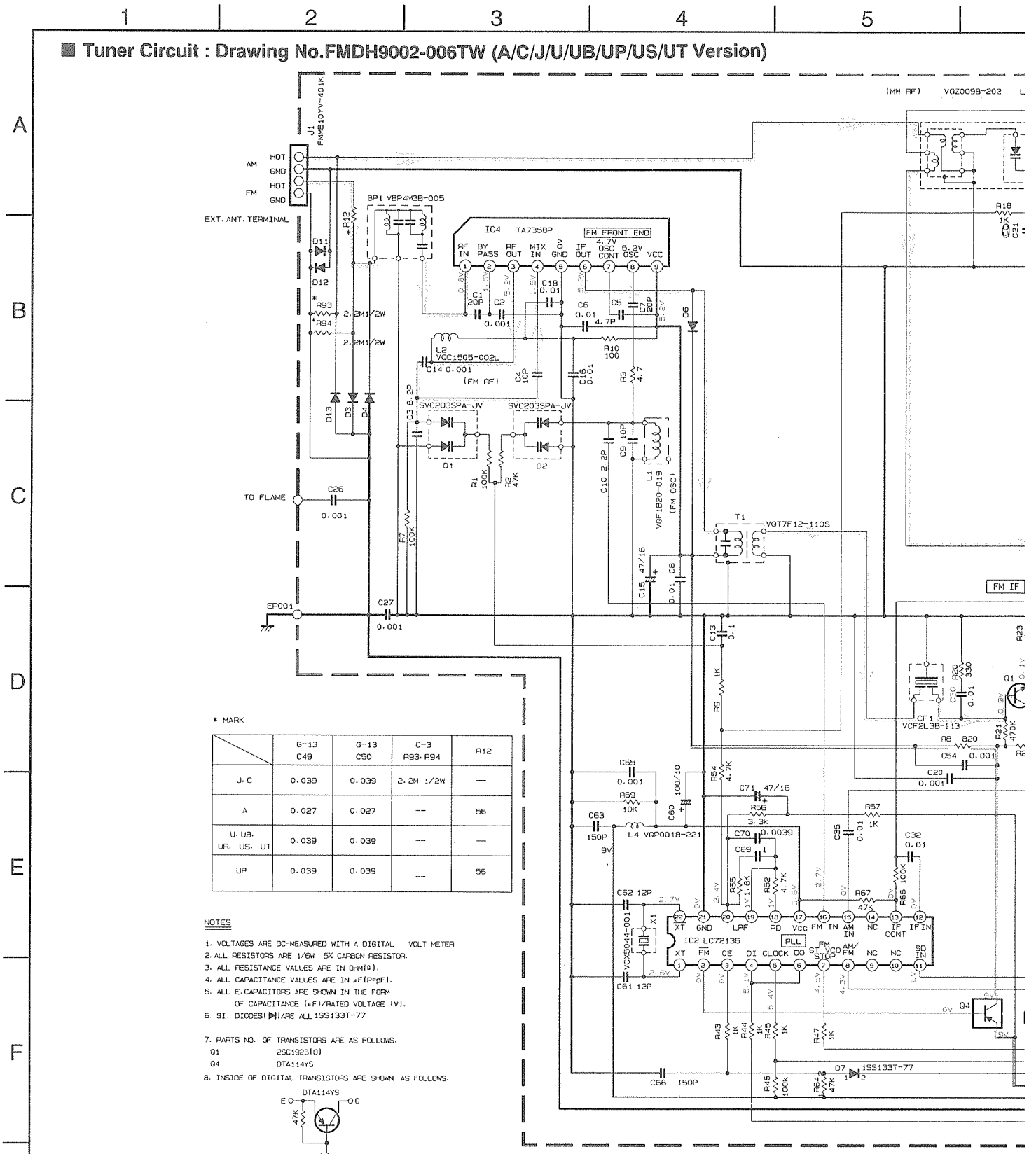

* MARK

	G-13 C49	G-13 C50	C-3 R93, R94	R12
J, C	0.039	0.039	2.2M 1/2W	--
A	0.027	0.027	--	56
U, UB, UA, US, UT	0.039	0.039	--	--
UP	0.039	0.039	--	56

NOTES

1. VOLTAGES ARE DC-MEASURED WITH A DIGITAL VOLT METER
2. ALL RESISTORS ARE 1/6W 5% CARBON RESISTOR.
3. ALL RESISTANCE VALUES ARE IN OHM(Ω).
4. ALL CAPACITANCE VALUES ARE IN μF(P=pF).
5. ALL E.CAPACITORS ARE SHOWN IN THE FORM OF CAPACITANCE (μF)/RATED VOLTAGE (V).
6. SI. DIODES(▶|) ARE ALL 1SS133T-77
7. PARTS NO. OF TRANSISTORS ARE AS FOLLOWS.
   Q1 2SC1923(O)
   Q4 DTA114YS
8. INSIDE OF DIGITAL TRANSISTORS ARE SHOWN AS FOLLOWS.

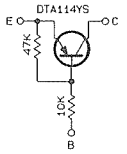

	CONDITION / PIN NO.	1	2	3	4	5	6	7	8	9	10	11	12	13	14	15	16	17	18	19	20	21	22	23	24
IC1	FM NO SIGNAL	2.0	0.6	0	2.0	5.2	5.2	0.9	0	0	5.2	5.2	1.1	1.1	4.5	3.7	3.7	1.4	0	1.2	1.2	2.0	2.0	5.2	2.0
	FM 60dB STEREO	2.0	0.6	0	2.0	4.3	4.4	1.1	0	0	0	0	1.1	1.1	4.4	4.0	3.7	1.4	0	1.3	1.1	2.0	2.0	5.2	2.0
	AM NO SIGNAL	2.0	0.6	0	2.0	4.8	5.2	0	0	0	5.2	5.2	1.1	1.1	4.6	0.5	6.2	1.4	1.5	1.5	1.5	2.0	2.0	5.2	2.0
IC2	FM NO SIGNAL	2.6	0	0	5.2	5.2	5.2	3.7	3.7	3.7	0	5.2	0	0	0	0	0	2.5	5.2	0.9	0.9	1.1	0	2.5	
IC4	FM NO SIGNAL	0.8	1.5	5.7	1.5	0	5.8	5.0	5.7	5.8															

Note : FMDH9002006TW(/s/g)

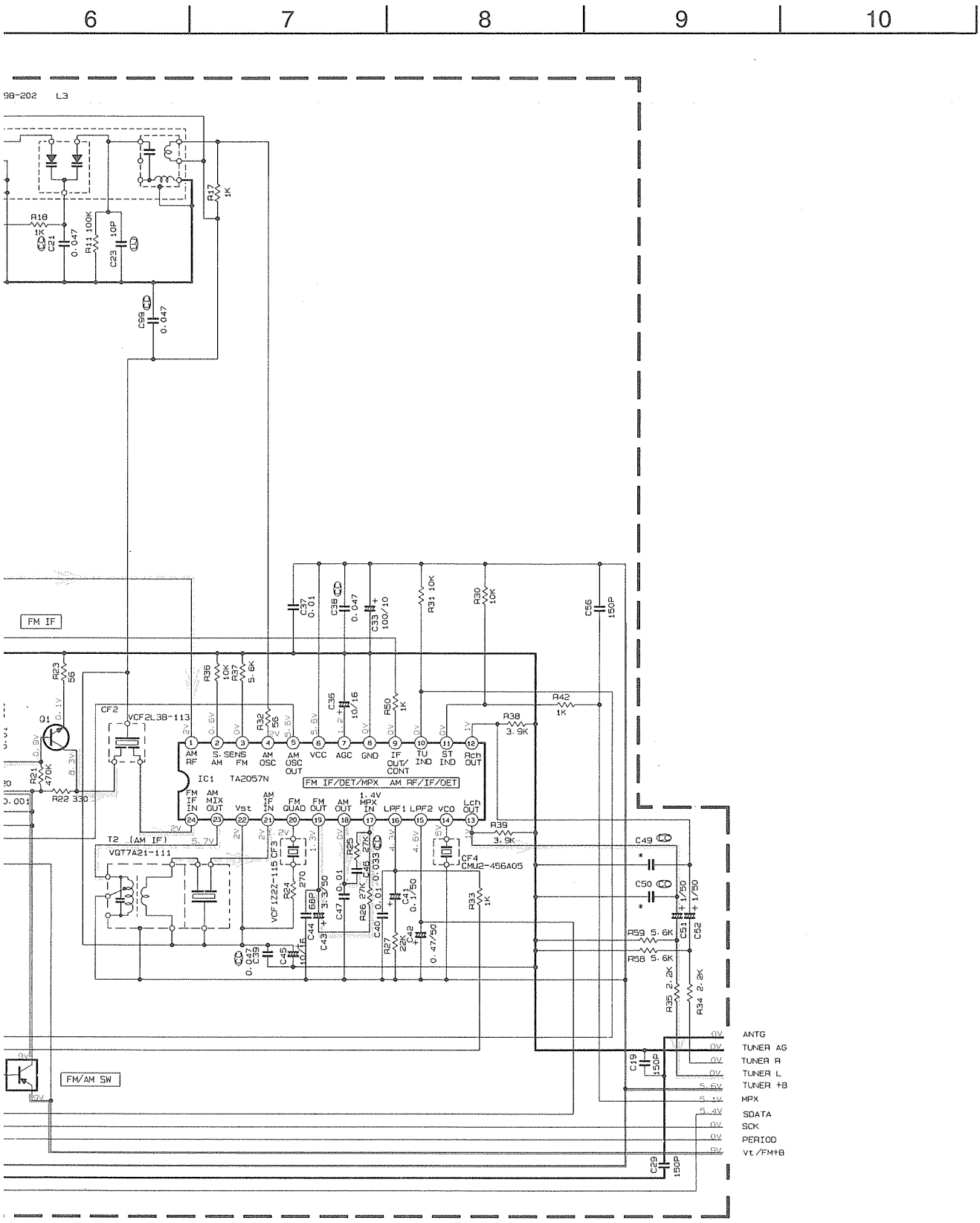

IC No.	Q1			Q4		
PIN NAME	E	C	B	E	C	B
FM 76.0MHz	0	0.1	0.7	0.8	0.7	0.1
AM 531KHZ	0	0	0	0.8	0	0.8

+B Line

FM Radio signal

AM Radio signal

■ Fuction & Bass Boost Amplifier / Regulator Circuit : Drawing No.FMDH9003-006AV (1/3)

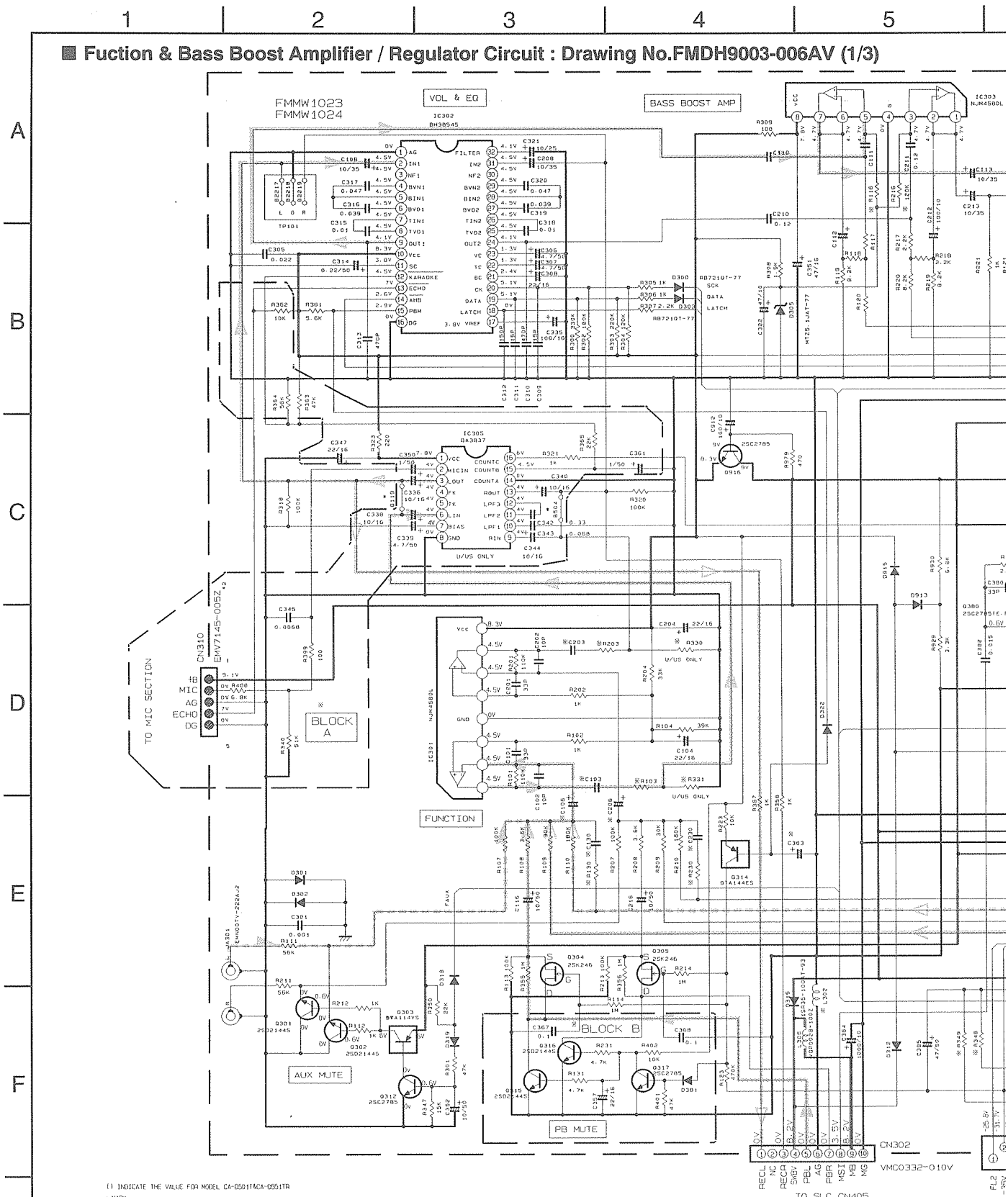

( ) INDICATE THE VALUE FOR MODEL CA-D501T&CA-D551TR

* MARK

MODEL	LOC / VER	L302 9-H	L303/L304 18-K/17-L	L305 17-L	BLOCK A/BLOCK B 3-G	B119/B504 5-E	D316/D317 12-K	D383 19-F	D381/D382 14-L	C366 K-12	C303 8-I	C115/C215 11-C	C353/C354 17-J	R349 10-L	R403 18-E	R924 14-E	R330/R331 7-G	R103/R203 6-H	R348 10-L	C103/C203 6-G	C106/C2 6-I
CA-D401T (CA-D501T)	J.C	B163	B106/B105	B107	--	USE	B103/B104	--	--	150p	2.2/50	--	470P	--	--	B153	--	100	--	0.22	3.3/50
	U.UB.UP UR.US.UT	B163	B106/B105	B107	USE	--	B103/B104	1SS133T-77	--	150p	--	--	470P	--	560	22 F.RES (1/4W)	5.6K (2.4K)	22K (10K)	--		
	B.E.EN.G	VQZ0048-009	VQZ0048-009	VQZ0048-009	--	USE	B103/B104	--	--	--	2.2/50	--	--	--	--	22 F.RES (1/4W)	--	100	--	(4.7/50)	(4.7/5
	A	B163	B106/B105	B107	--	USE	B103/B104	--	--	150p	2.2/50	--	470p	--	--	22 F.RES (1/4W)	--	100	--		
	VX	B163	B106/B105	VQZ0048-009	--	USE	B103/B104	--	--	--	2.2/50	--	--	--	--	22 F.RES (1/4W)	--	100	--		
MX-D451TR (CA-D551TR)	B.E.EN.G	VQZ0048-009	VQZ0048-009	VQZ0048-009	--	USE	RB721QT-77	--	RB721QT-77	--	2.2/50	330P	--	10K	--	22 F.RES (1/4W)	--	100	4.7K		

Note : FMDH9003006AV(/s/g) .003

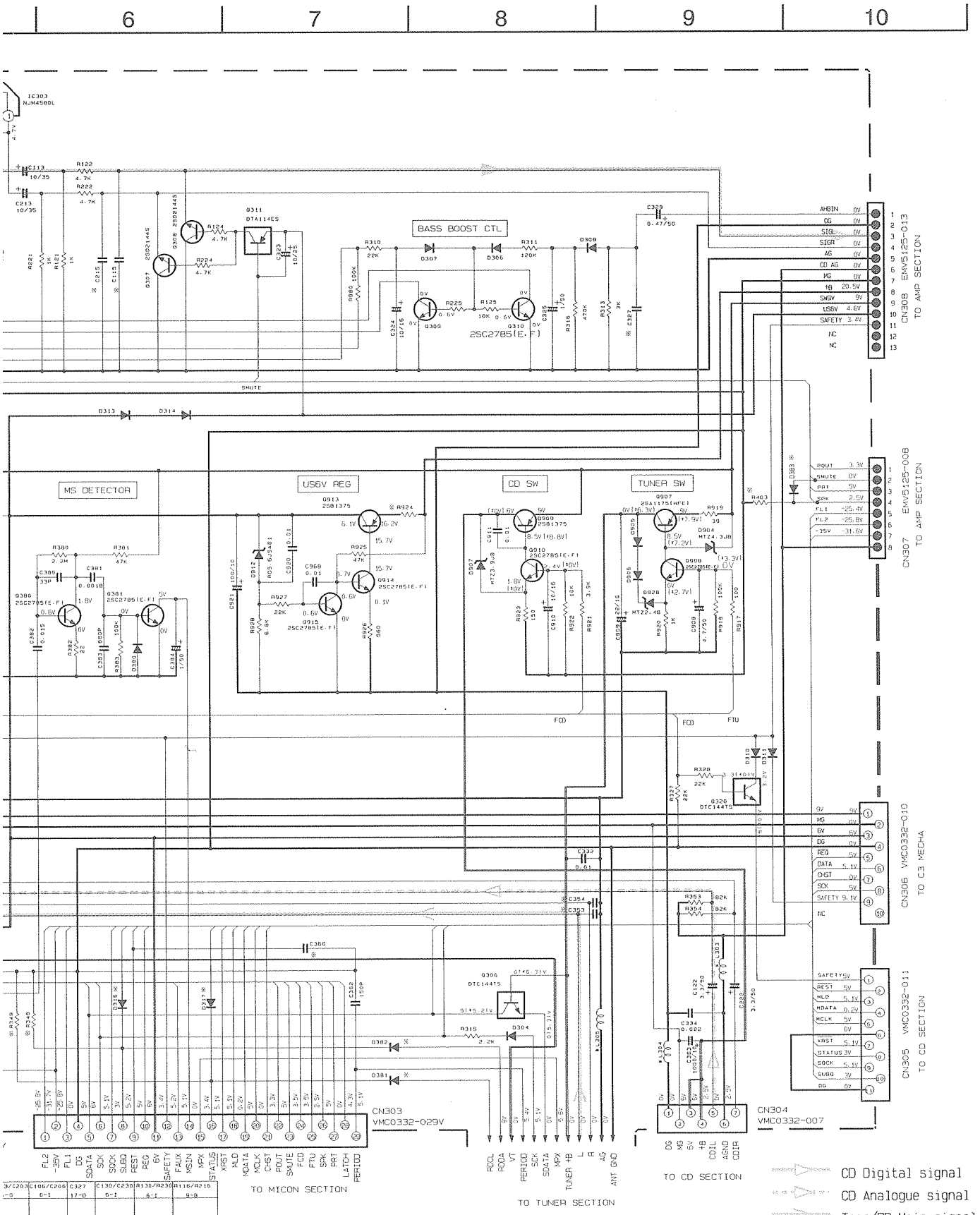

C203	C106/C206	C327	C130/C230	R130/R230	R116/R216
9	6-1	17-0	6-1	6-1	9-8
.22	3-3/50	0.18	33P	180K	120K
.7/50	(4.7/50)	(0.22)	(82P)	(82K)	(100K)

NOTES

1. VOLTAGE ARE DC-MEASURED WITH A DIGITAL VOLT METER OR OSCILLOSCOPE WITHOUT INPUT SIGNAL. (CONDITION -- CD MODE) VOLTAGE VALUE MARKED * IS IN TUNER POSITION
2. UNLESS OTHERWISE SPECIFIED, RESISTORS ARE 1/6W ±5% CARBON RESISTORS. ALL RESISTANCE VALUES ARE IN OHM(Ω). ALL CAPACITORS ARE CERAMIC CAPACITOR OR MYLAR CAPACITOR. ALL CAPACITANCE VALUES ARE IN μF(P=pF). ALL INDUCTANCE VALUES ARE IN μH(m=mH). ALL E-CAPACITORS ARE SHOWN IN THE FORM OF CAPACITANCE (μF)/RATED VOLTAGE (V). ALL DIODES ARE 1SS133T-77. ALL NPN TRANSISTORS ARE 2SC3330(S.11) OR 2SC2785(E.F)
3. * MARK ARE FOR USE B/E/EN/G VERSION

Power Amplifier & Regulator Circuit : Drawing No.FMDH9003-006AV (2/3)

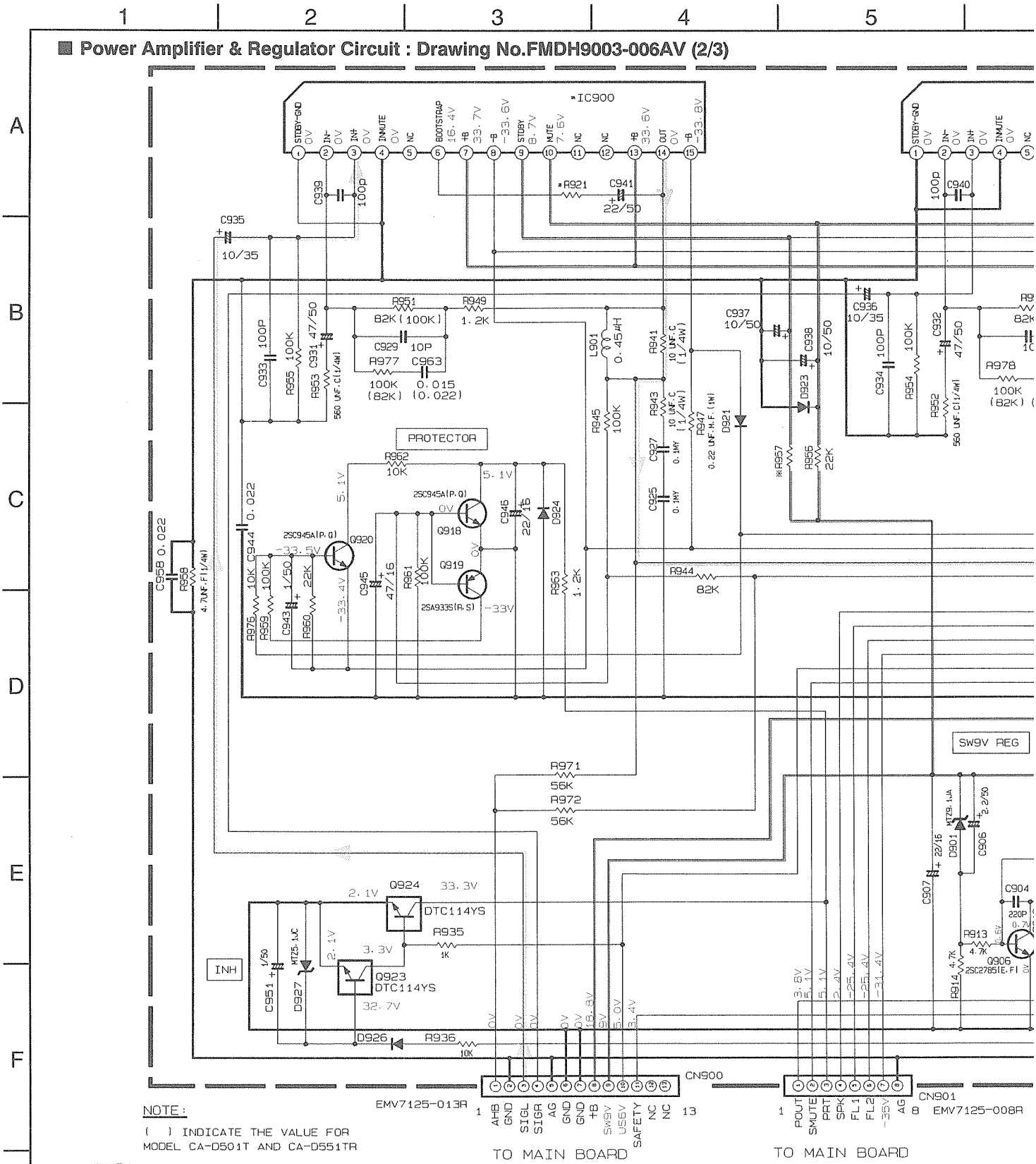

NOTE:

( ) INDICATE THE VALUE FOR MODEL CA-D501T AND CA-D551TR

※MARK

VERSION	C947/948/949/950 18-B	C971/C972 18-B	D908/909/910/911 18-H	IC900/901 6-B/13-B	L971/972 17-B	R921/922 6-C/13-C	R957 9-E	R964/965 17-D	R982 12-H	R973/R974 19-B
B.E.EN.G	0.022	0.0027	1N5401TM	TDA7295	VQZ0104-003	B125/126	1K	680	B120	4.7
U.UB.UP.UR US.UT.A.VX	--	--	1N5401TM	TDA7295	--	B125/126	1K	680	B120	—
J.C	--	--	10E2-FD	TDA7294	--	2.2K	10K	680 F.RES(1/4W)	22 F.RES (1/4W)	—

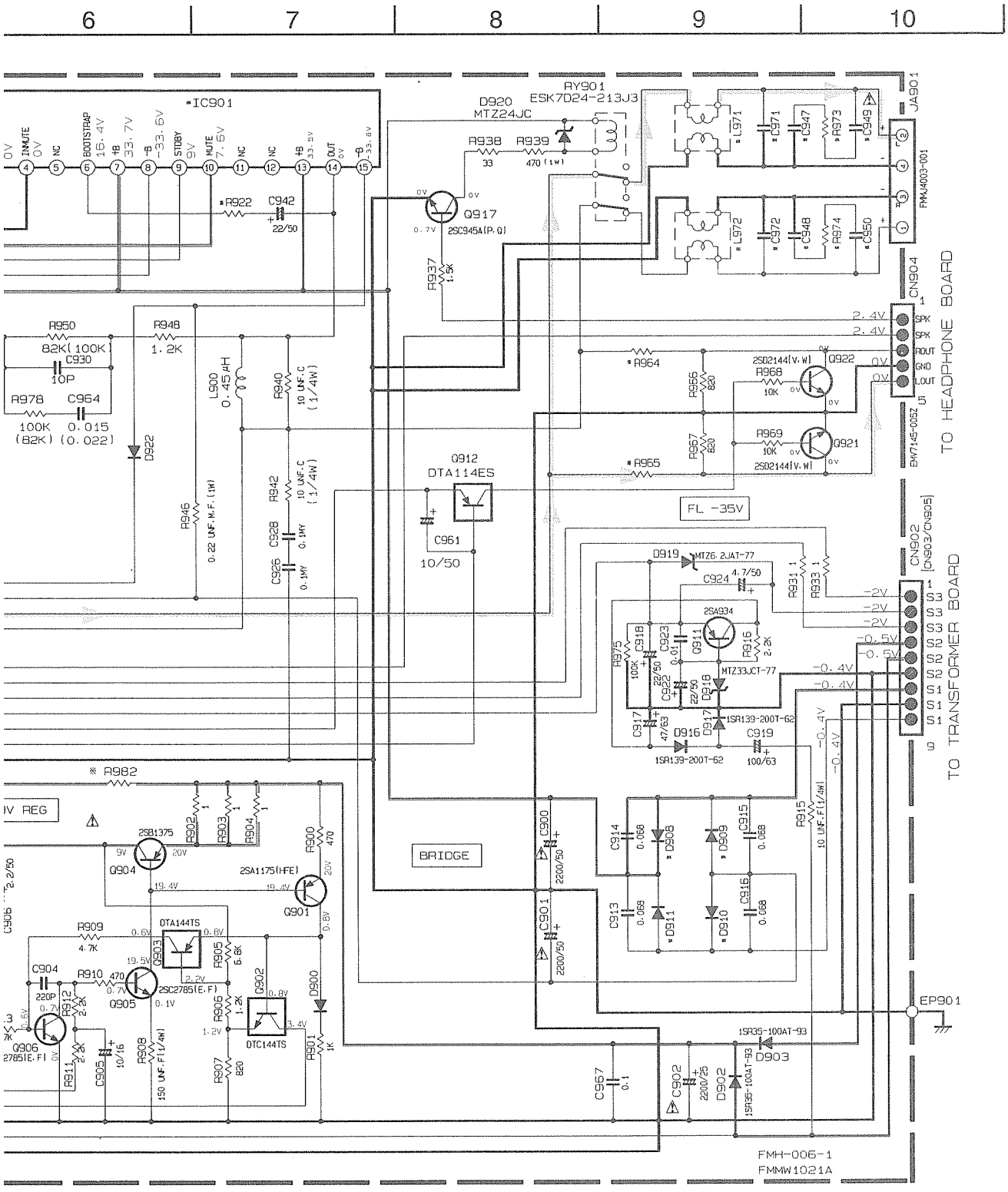

NOTES

1. VOLTAGES ARE DC-MEASURED USING AN OSCILLOSCOPE WITHOUT INPUT SIGNAL CONDITION.
2. UNLESS OTHERWISE SPECIFIED
   ALL RESISTORS ARE 1/6W ± 5% CARBON RESISTOR.
   ALL CAPACITORS ARE 50V CERAMIC CAPACITOR OR 50V MYLAR CAPACITOR.
   ALL RESISTANCE VALUES ARE IN OHM(Ω).
   ALL CAPACITANCE VALUES ARE IN μF(P=pF).
   ALL E-CAPACITORS ARE SHOWN IN THE FORM OF CAPACITANCE(μF)/RATED VOLTAGE (V).
   ALL DIODES ARE 1SS133T-77 TYPE
   (PP) POLYPROPYLENE CAPACITOR
   (M) 50V ± 5% MYLAR CAPACITOR OR 50V ± 5% THIN FILM CAPACITOR
3. THOSE PART WITH BRACKET IS NOT USED.
   FOR RESISTOR, IT WOULD BE A SHORT.
   FOR CAPACITOR, IT WOULD BE AN OPEN.

Main PB Signal

+B Line

Power Transformer Circuit : Drawing No.FMDH9003-006AV (3/3)

POWER SUPPLY BLOCK

J/C — AC120V/60Hz

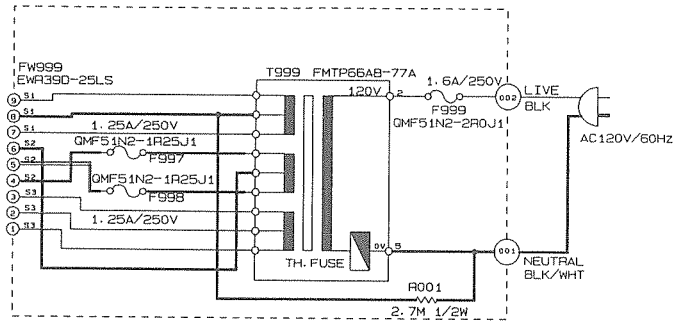

POWER SUPPLY BLOCK

B — AC230/50Hz

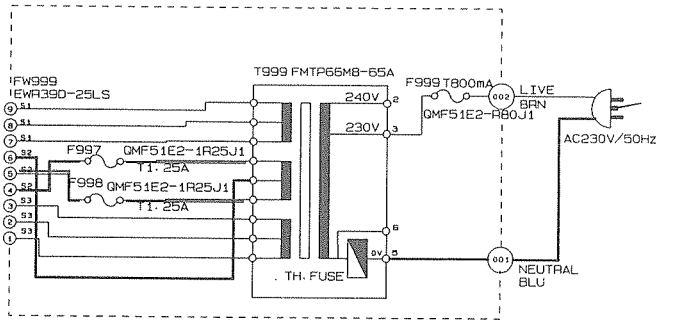

POWER SUPPLY BLOCK

U/UB/UR/US/UT — AC110/127/220/230 ~ 240V ~ 50/60Hz

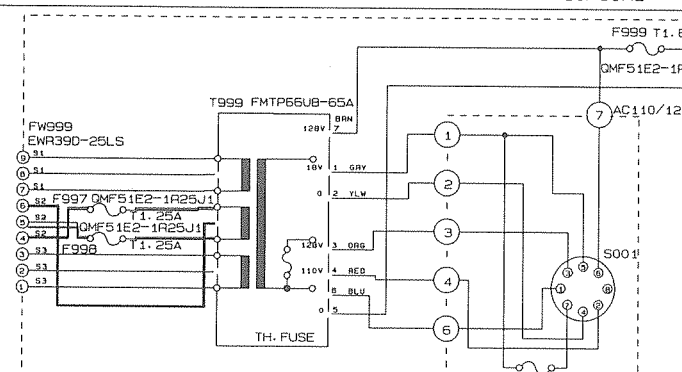

VOLTAGE SELECTOR LOCATION

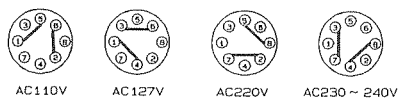

Note : FMDH9003006AV(/s/g)

6 7 8 9 10

POWER SUPPLY BLOCK

E/EN/G/VX AC230/50Hz

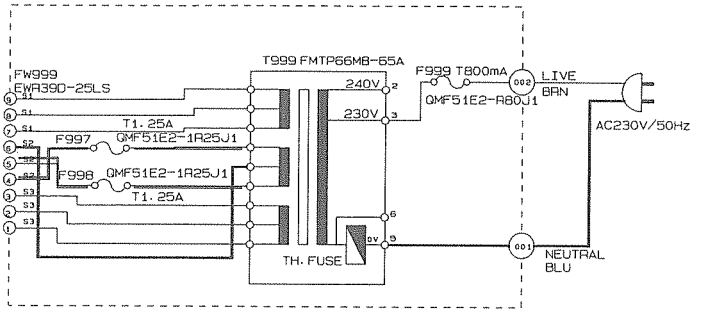

POWER SUPPLY BLOCK

A AC240/50Hz

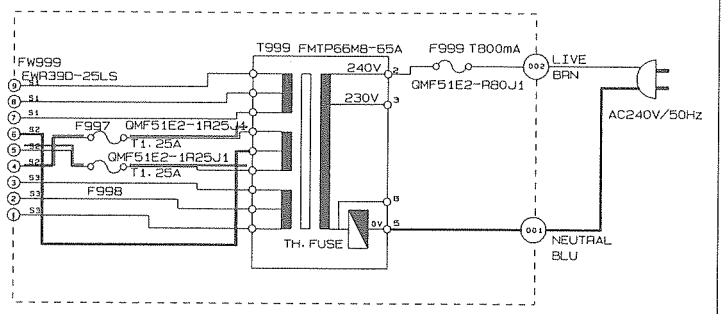

POWER SUPPLY BLOCK

UP AC 220V/50Hz

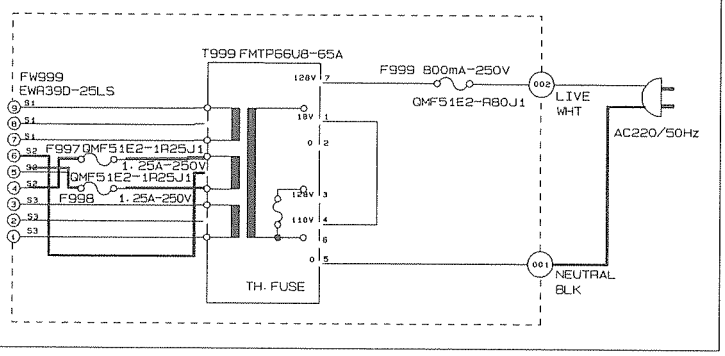

+B Line

System CPU & Operation Switch Circuit : Drawing No.FMDH9002-006SV

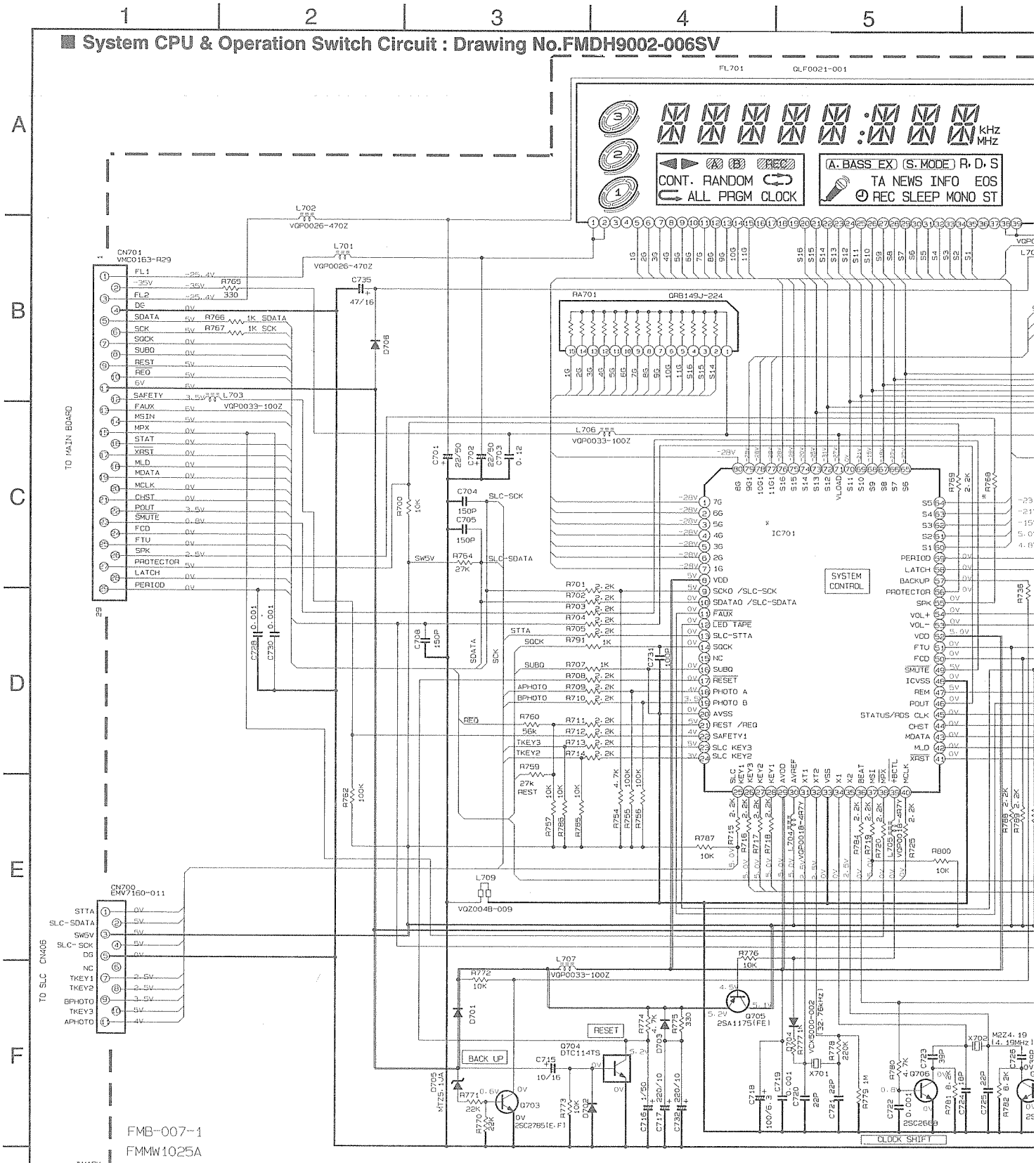

*MARK

MODEL	VERSIONS	R479 19-M	R698 15-L	R699 15-M	S710/711/712/713 16-K	R491 18-F	R801 16-H	D411 19-C	Q711 18-G	R768 11-F
CA-D301T	J. C	47K	--	--	--	--	B134	SLA-342VCA47	DTC-114ES	2.2K
	U. UB. UP. US. UT.	--	--	--	--	300	47K	SLA-380LT-TB	2SD2144S	56
CA-D401T	UA	--	--	75K	--	300	47K	SLA-380LT-TB	2SD2144S	56
	B. E. EN. G	47K	75K	B129	--	300	47K	SLA-380LT-TB	2SD2144S	2.2K
CA-D501T	A	--	B133	10K	--	300	47K	SLA-380LT-TB	2SD2144S	2.2K
	VX	--	18K	10K	--	300	47K	SLA-380LT-TB	2SD2144S	2.2K
MX-D451TR CA-D551TR	B. E. EN. G	47K	18K	10K	USE	300	47K	SLA-380LT-TB	2SD2144S	2.2K

MODEL	IC701 10-F
MX-D301T U/UB/UP UA/US/UT	UPD78044FGF-067
OTHERS	UPD78044FGF-055

NOTES

1. VOLTAG
CONDI
2. UNLESS
RESIS
ALL F
ALL C
ALL C
ALL I
ALL E
ALL D

Note : FMDH9002006SV(/s/g)

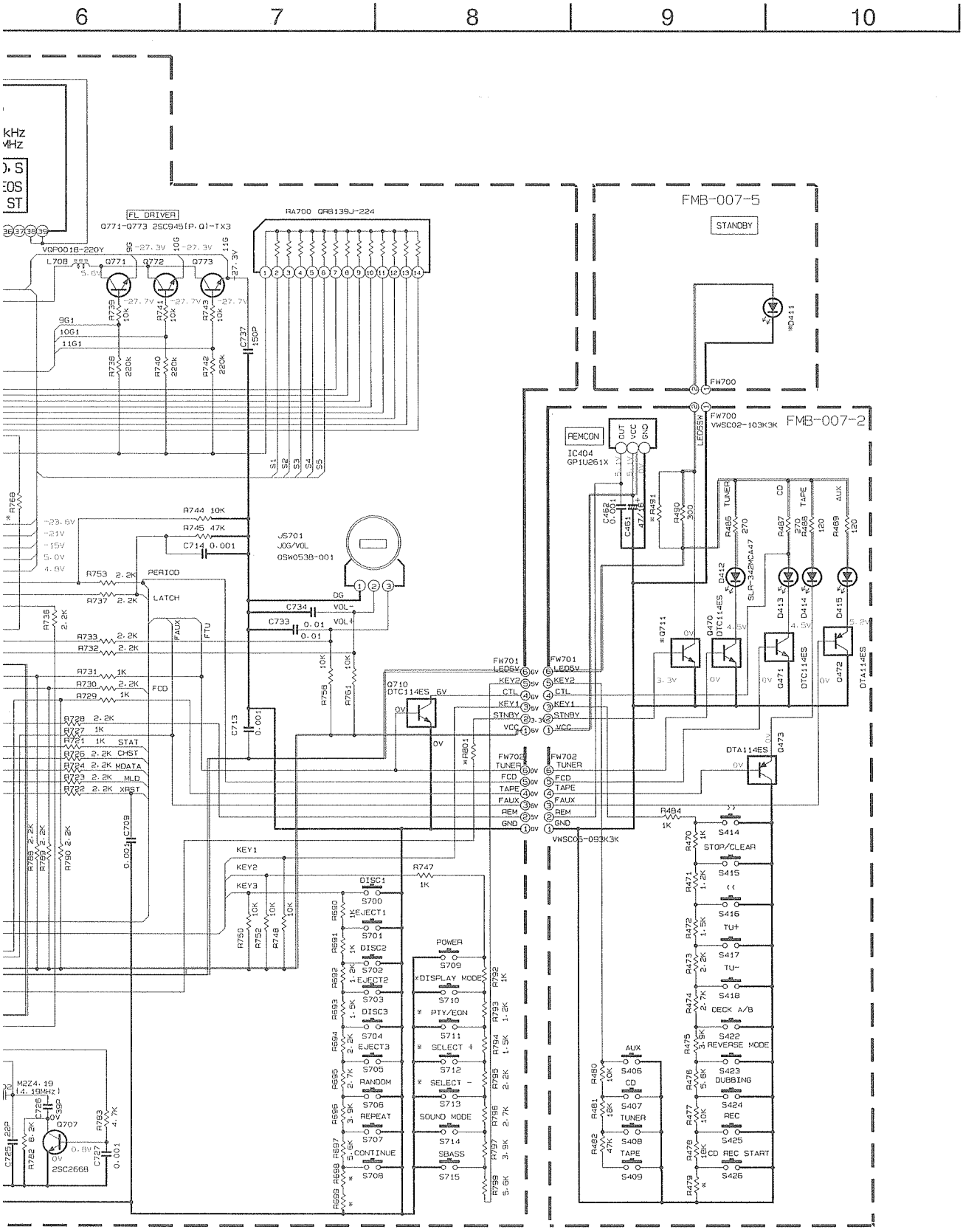

NOTES

1. VOLTAGES ARE DC-MEASURED WITH A DIGITAL VOLT METER OR OSCILLOSCOPE WITHOUT INPUT SIGNAL.
   CONDITION ---- TAPE PB MODE
2. UNLESS OTHERWISE SPECIFIED
   RESISTORS ARE 1/6W ±5% CARBON RESISTOR.
   ALL RESISTANCE VALUES ARE IN OHM(Ω).
   ALL CAPACITORS ARE CERAMIC CAPACITOR OR MYLAR CAPACITOR.
   ALL CAPACITANCE VALUES ARE IN μF(P=pF).
   ALL INDUCTANCE VALUES ARE IN μH(m=mH).
   ALL E-CAPACITORS ARE SHOWN IN THE FORM OF CAPACITANCE (μF)/RATED VOLTAGE (V).
   ALL DIODES ARE 1SS133

+B Line

■ CD Traverse Mechanism Control Circuit : Drawing No.FMDH9002-006MW

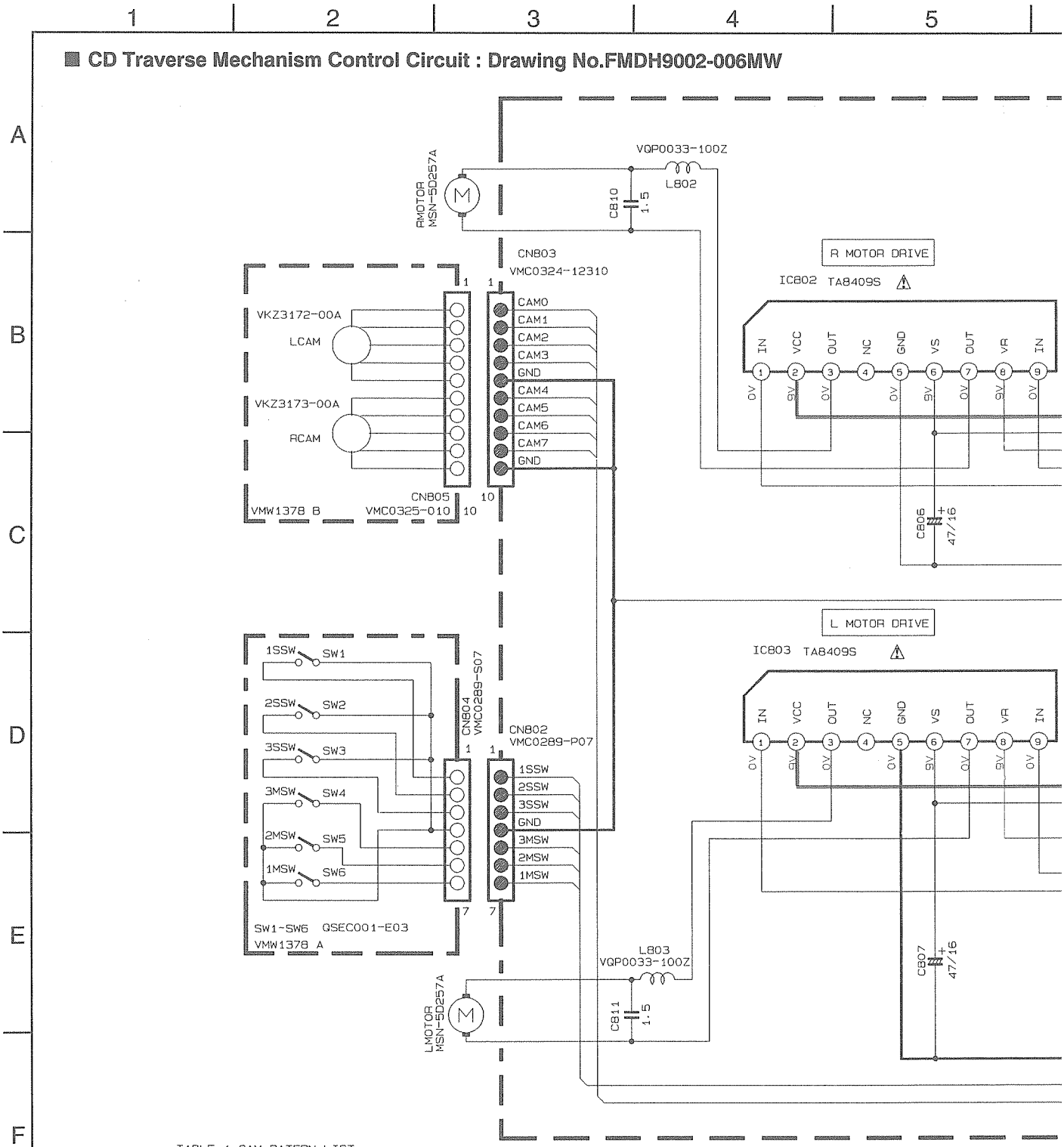

TABLE 1 CAM PATERN LIST

CAM NO. / POSITION	LCAM 0	1	2	3	COM	RCAM 4	5	6	7	POSITION
MAIN TRAY1	0	1	1	1	0	1	1	1	0	EMERGENCY
SUB TRAY1	0	0	1	1	0	1	1	0	0	TRAY1 STAND-BY
CAMR 1	0	1	0	1	0	1	0	1	0	TRAY1 CHACKING
MAIN TRAY2	1	0	0	1	0	1	0	0	1	TRAY2 STAND-BY
SUB TRAY2	1	1	1	0	0	0	1	1	1	TRAY2 CHACKING
CAMR 2	1	0	1	0	0	0	1	0	1	TRAY3 STAND-BY
MAIN TRAY3	1	1	0	0	0	0	0	1	1	TRAY3 CHACKING
SUB TRAY3	1	0	0	0	0					
OFF	1	1	1	1	0	1	1	1	1	OFF

0=0V
1=5V

NOTES

1. VOLTAGES ARE DC-MEASURED WITH A DIGITAL V
   OR OSCILLOSCOPE WITHOUT INPUT SIGNAL.
   CONDITION --- DISC 1 CD STOP MODE
2. UNLESS OTHERWISE SPECIFIED, RESISTORS ARE 1/
   ALL RESISTANCE VALUES ARE IN OHM(Ω).
   ALL CAPACITORS ARE CERAMIC CAPACITOR OR MY
   ALL CAPACITANCE VALUES ARE IN μF(P=pF).
   ALL INDUCTANCE VALUES ARE IN μH(m=mH).
   ALL E.CAPACITORS ARE SHOWN IN THE FORM OF

Note : FMDH9002006MW(/s/g)

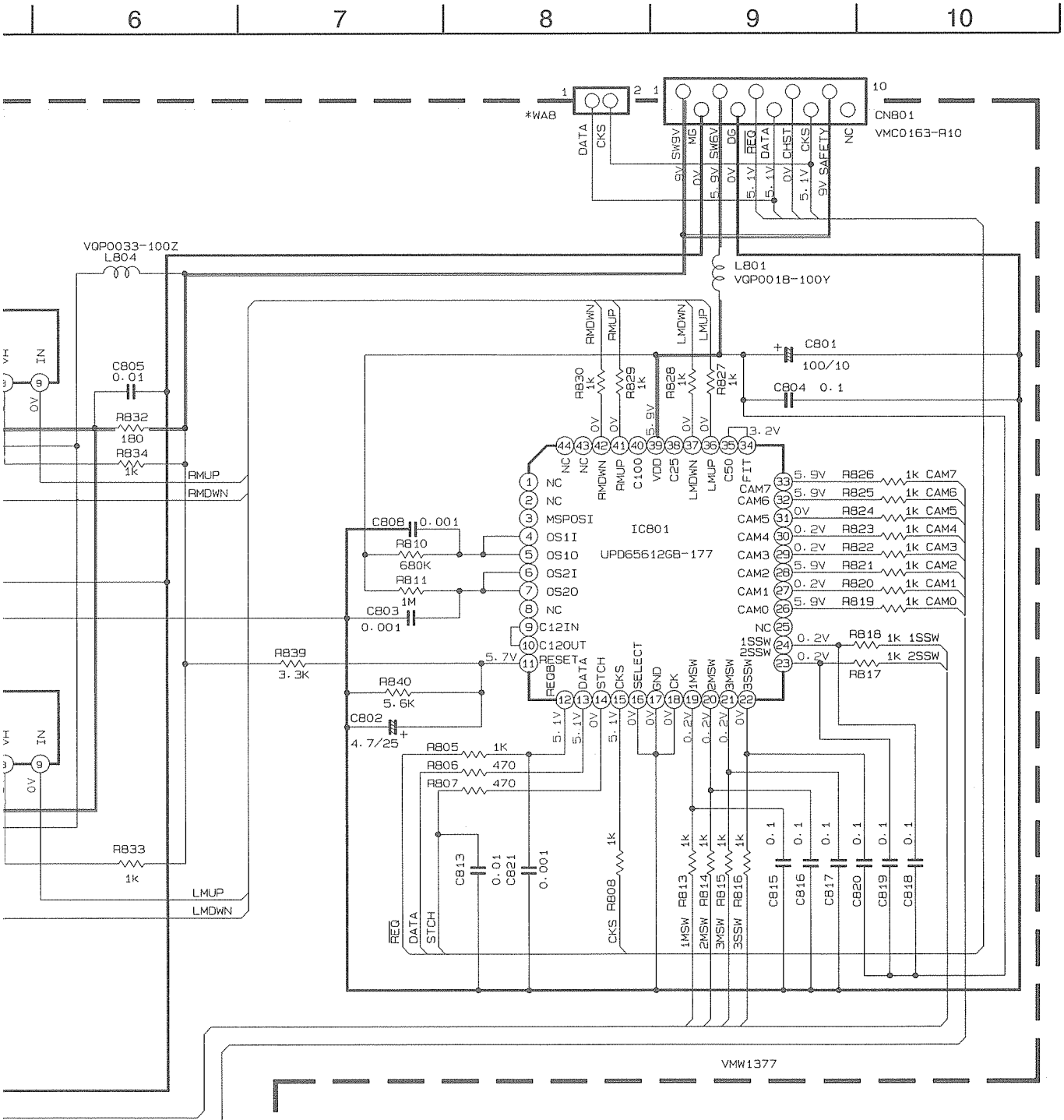

UF UNFLAMMABLE CARBON RESISTOR
MF METAL FILM RESISTOR
OF OXIDE METAL FILM RESISTOR
LL ±20% LOW LEAK CURRENT ELECTROLYTIC CAPACITOR
NP NON-POLARISED ELECTROLYTIC CAPACITOR
PP POLYPROPYLENE CAPACITOR
PS POLYSTYROL CAPACITOR

IGITAL VOLT METER
L.
:
S ARE 1/6W ±5% CARBON RESISTOR.
Ω).
TOR OR MYLAR CAPACITOR.
P=pF).
=mH).
FORM OF CAPACITANCE (μF)/RATED VOLTAGE (V).

+B Line

■ Mic Input Amplifier & Headphone Output Circuit : Drawing No.FMDH9003-006AX

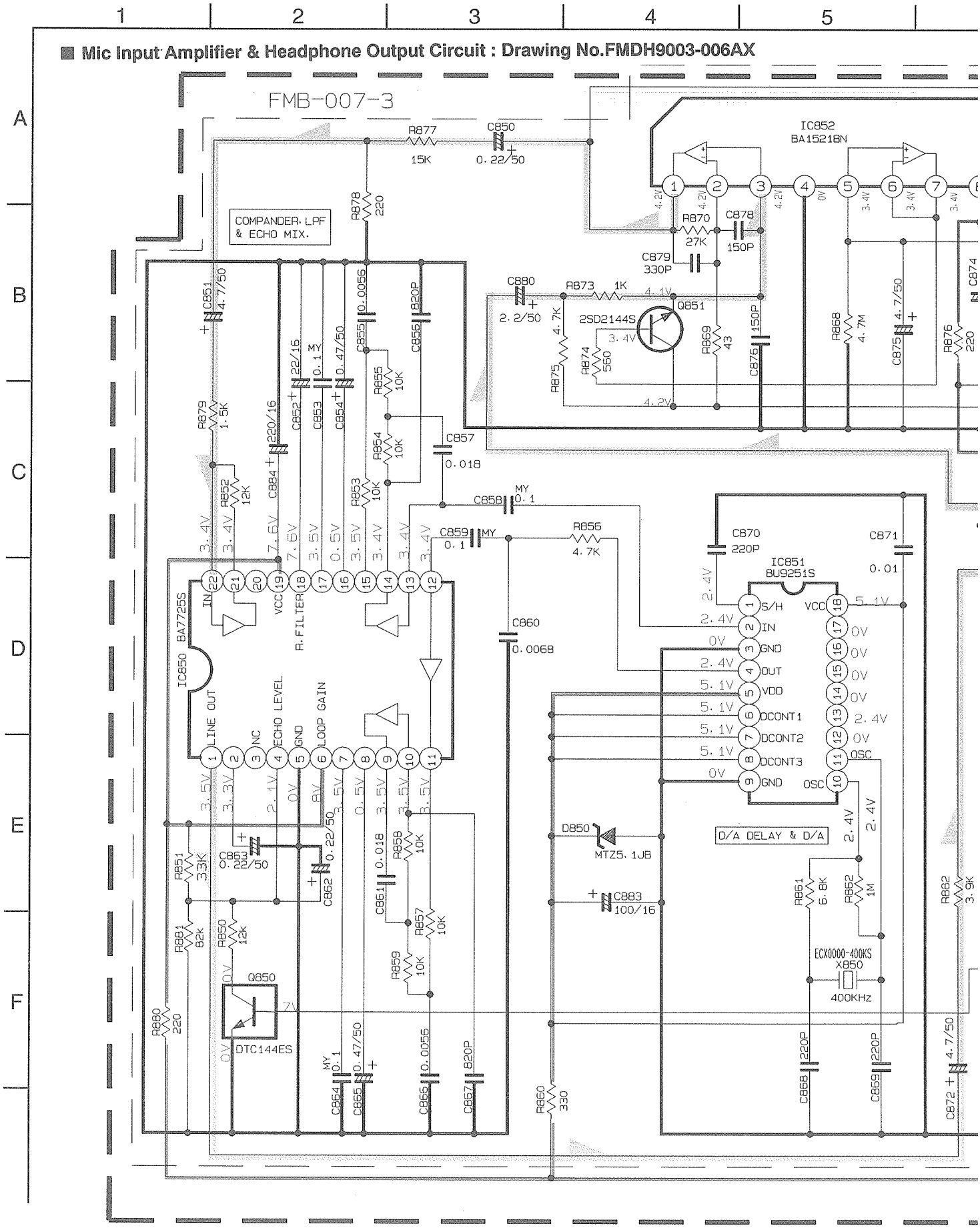

Note : FMDH900306AX(/s/g)

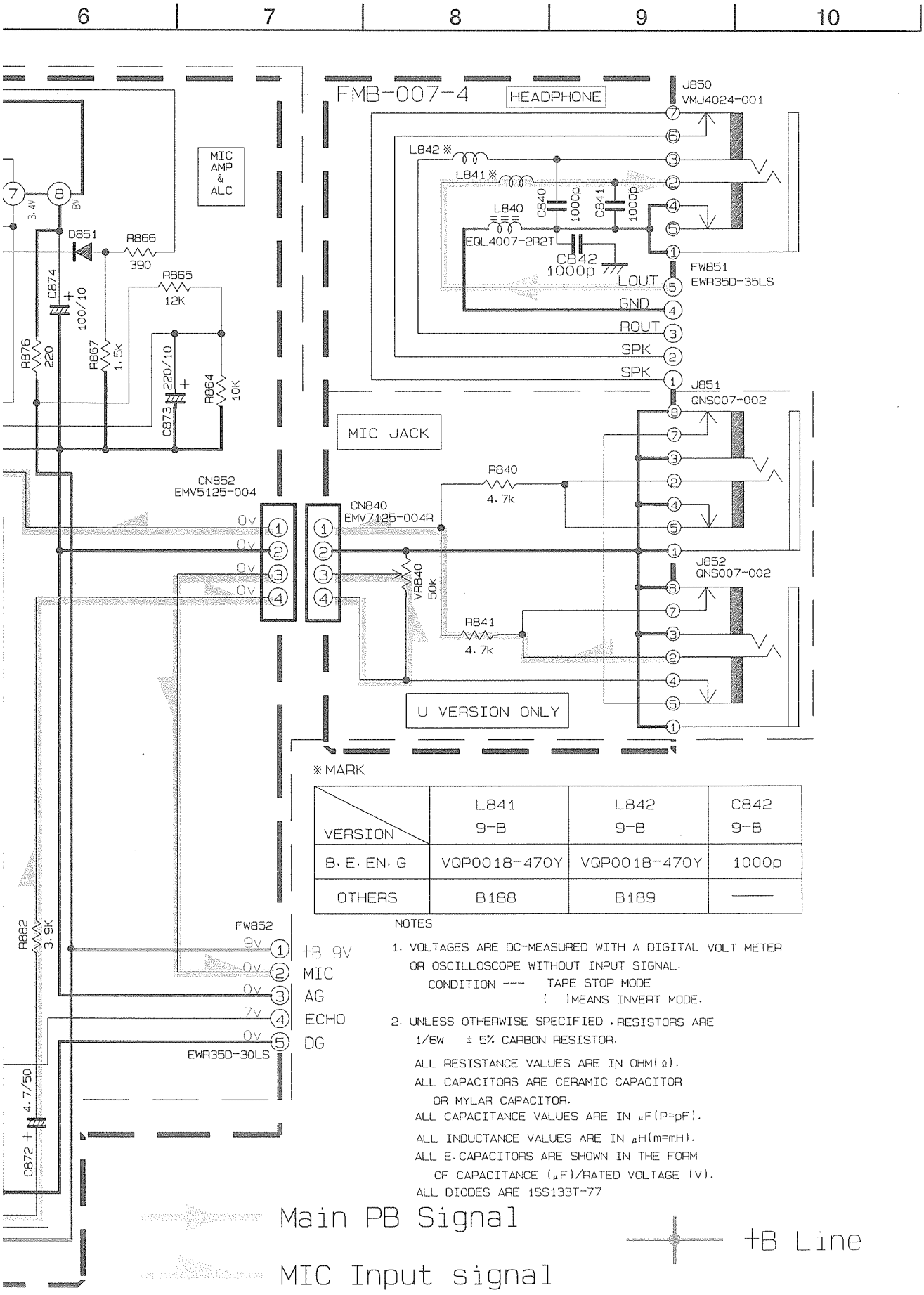

VERSION	L841 9-B	L842 9-B	C842 9-B
B. E. EN. G	VQP0018-470Y	VQP0018-470Y	1000p
OTHERS	B188	B189	——

NOTES

1. VOLTAGES ARE DC-MEASURED WITH A DIGITAL VOLT METER OR OSCILLOSCOPE WITHOUT INPUT SIGNAL.
   CONDITION --- TAPE STOP MODE
   ( )MEANS INVERT MODE.
2. UNLESS OTHERWISE SPECIFIED . RESISTORS ARE 1/6W ± 5% CARBON RESISTOR.

ALL RESISTANCE VALUES ARE IN OHM(Ω).
ALL CAPACITORS ARE CERAMIC CAPACITOR OR MYLAR CAPACITOR.
ALL CAPACITANCE VALUES ARE IN μF(P=pF).
ALL INDUCTANCE VALUES ARE IN μH(m=mH).
ALL E. CAPACITORS ARE SHOWN IN THE FORM OF CAPACITANCE (μF)/RATED VOLTAGE (V).
ALL DIODES ARE 1SS133T-77

12.Location of P.C.Board Parts

■ Main Amplifier Board : Block No. 01 (B/E/EN/G/VX Version)

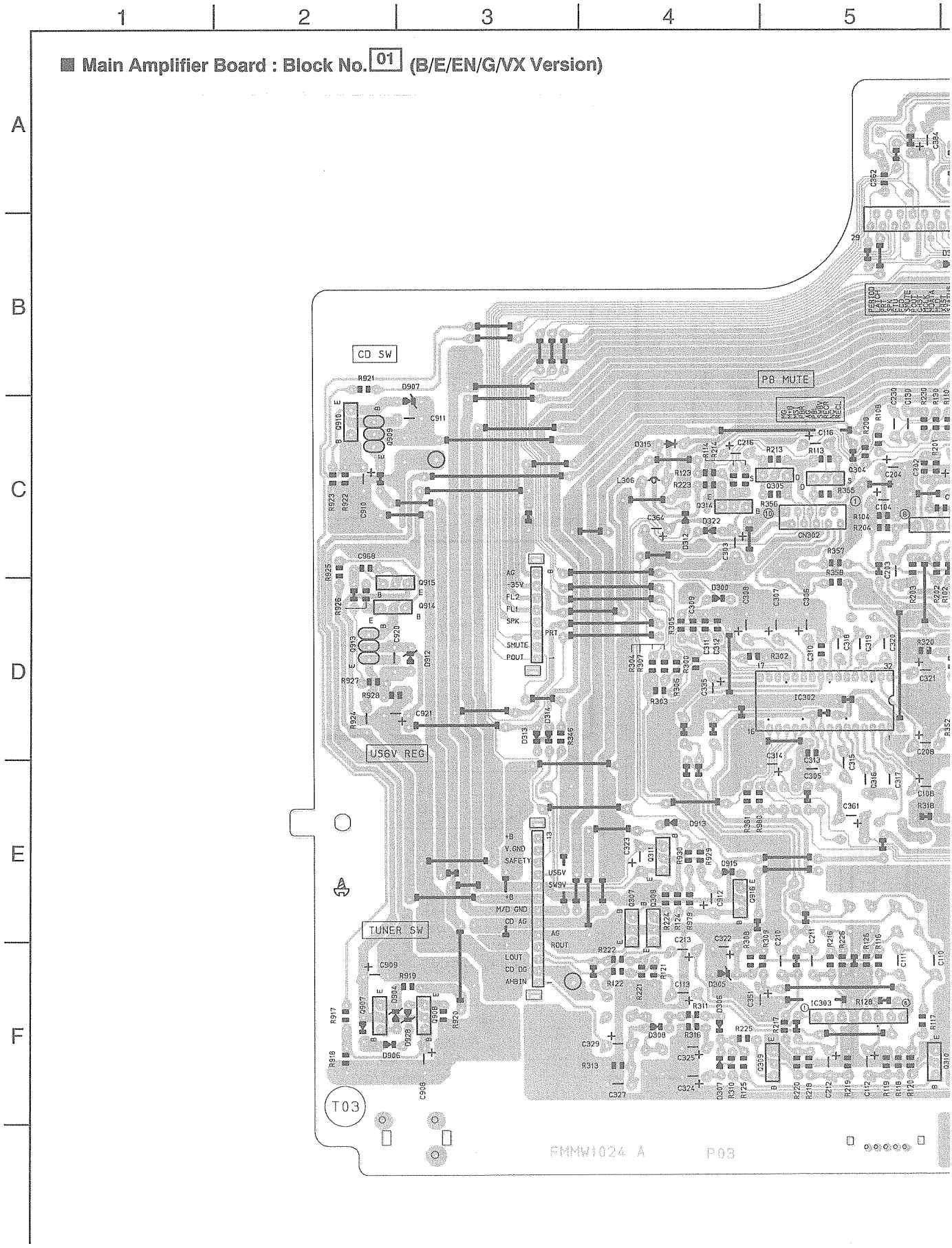

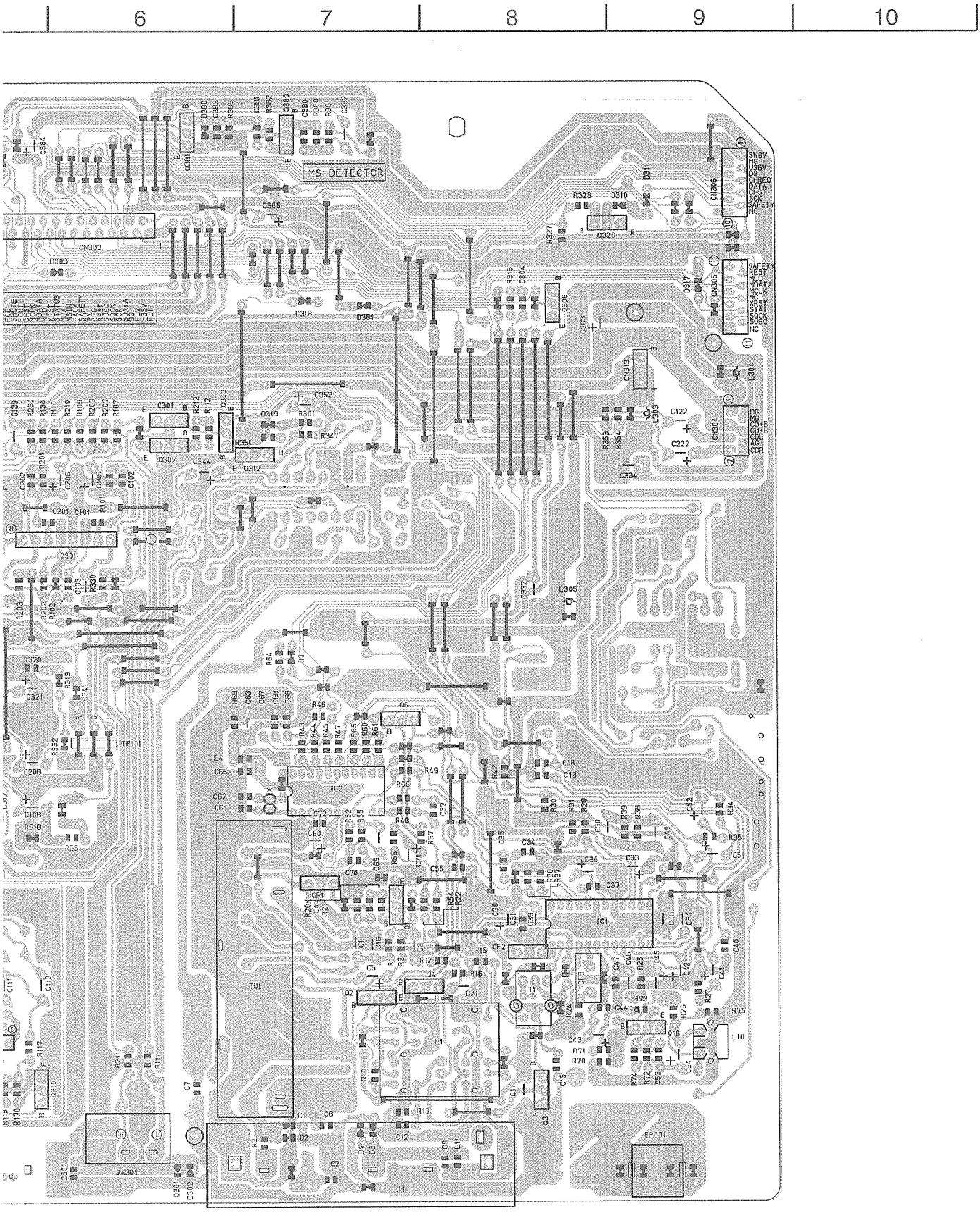

Fig.12-1

■ Main Amplifier Board : Block No. 01 (A/C/J/U/UB/UP/US/UT Version)

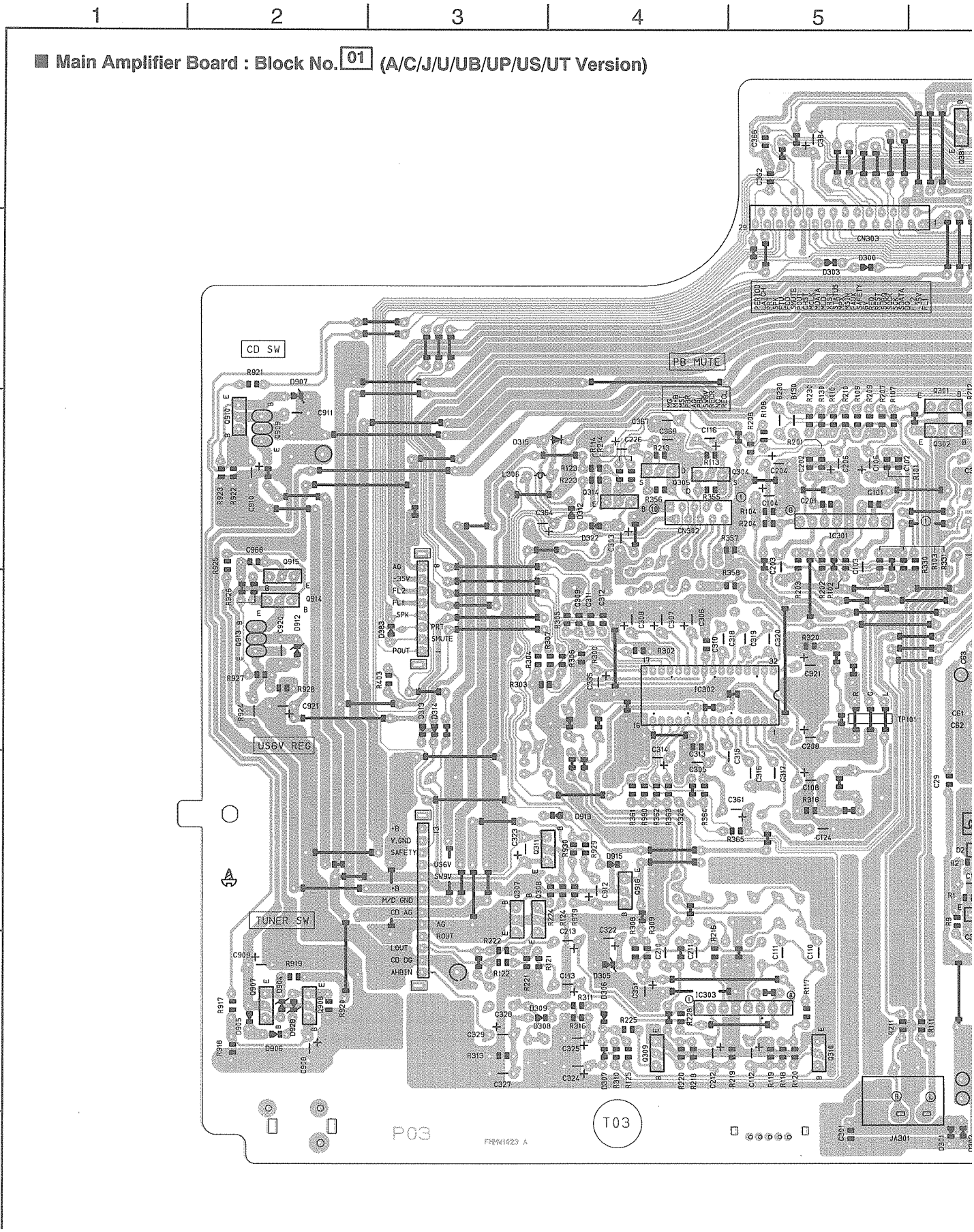

Fig

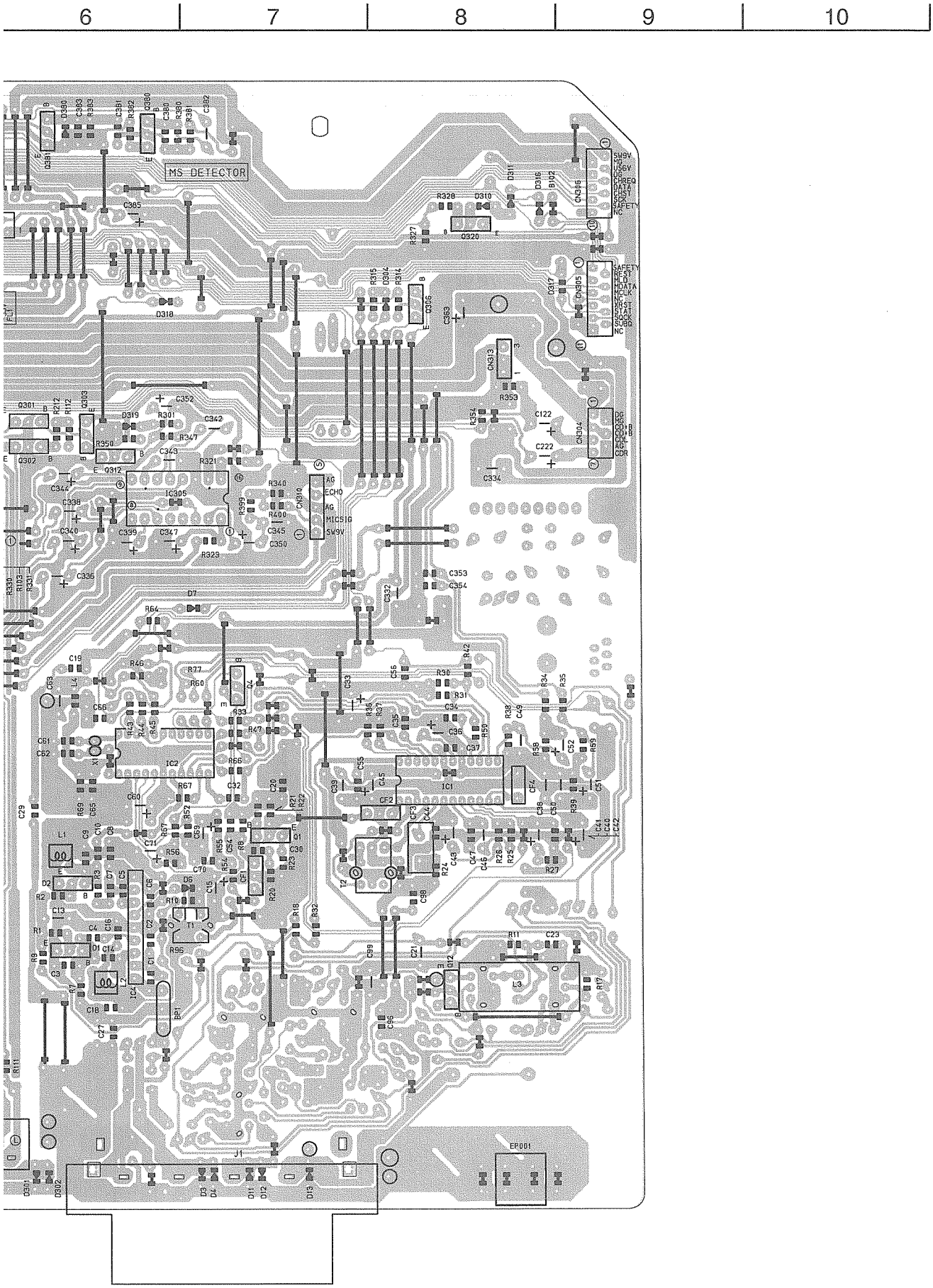

Fig.12-2

■ Power Supply & Power Amplifier Board : Block No. 02 (B/E/EN/G/VX Version)

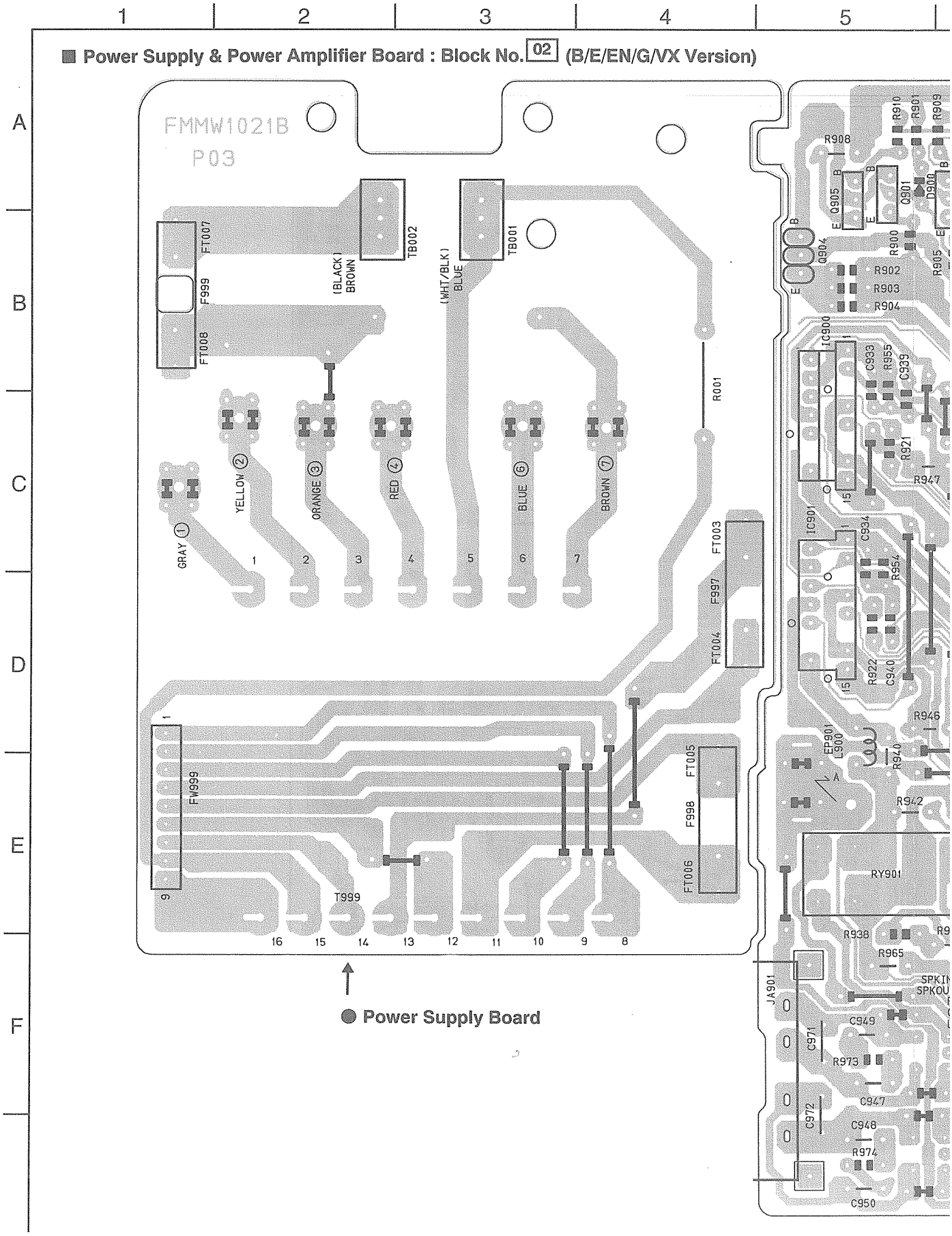

● Power Supply Board

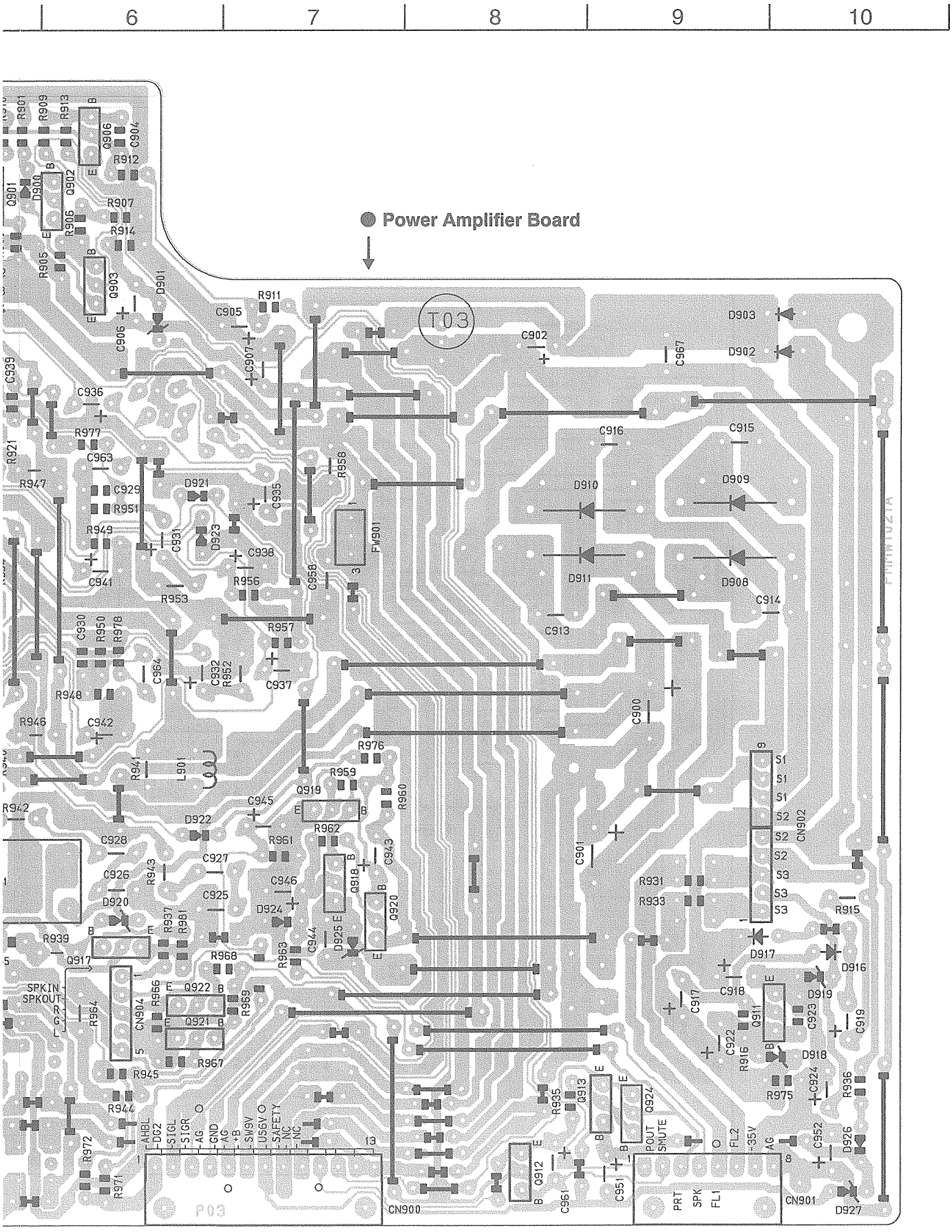
6
7
8
9
10
Power Amplifier Board
T03
P03
CN900
CN901
CN902
CN904
SPKIN
SPKOUT
AMBL
DC2
SIGL
SIGR
AG
GND
AG
+B
SW9V
US6V
SAFETY
NC
NC
POUT
SMUTE
PRT
SPK
FL1
FL2
-35V
AG

Fig.12-3

■ Power Supply & Power Amplifier Board : Block No. 02 (A/C/J/U/UB/UP/US/UT Version)

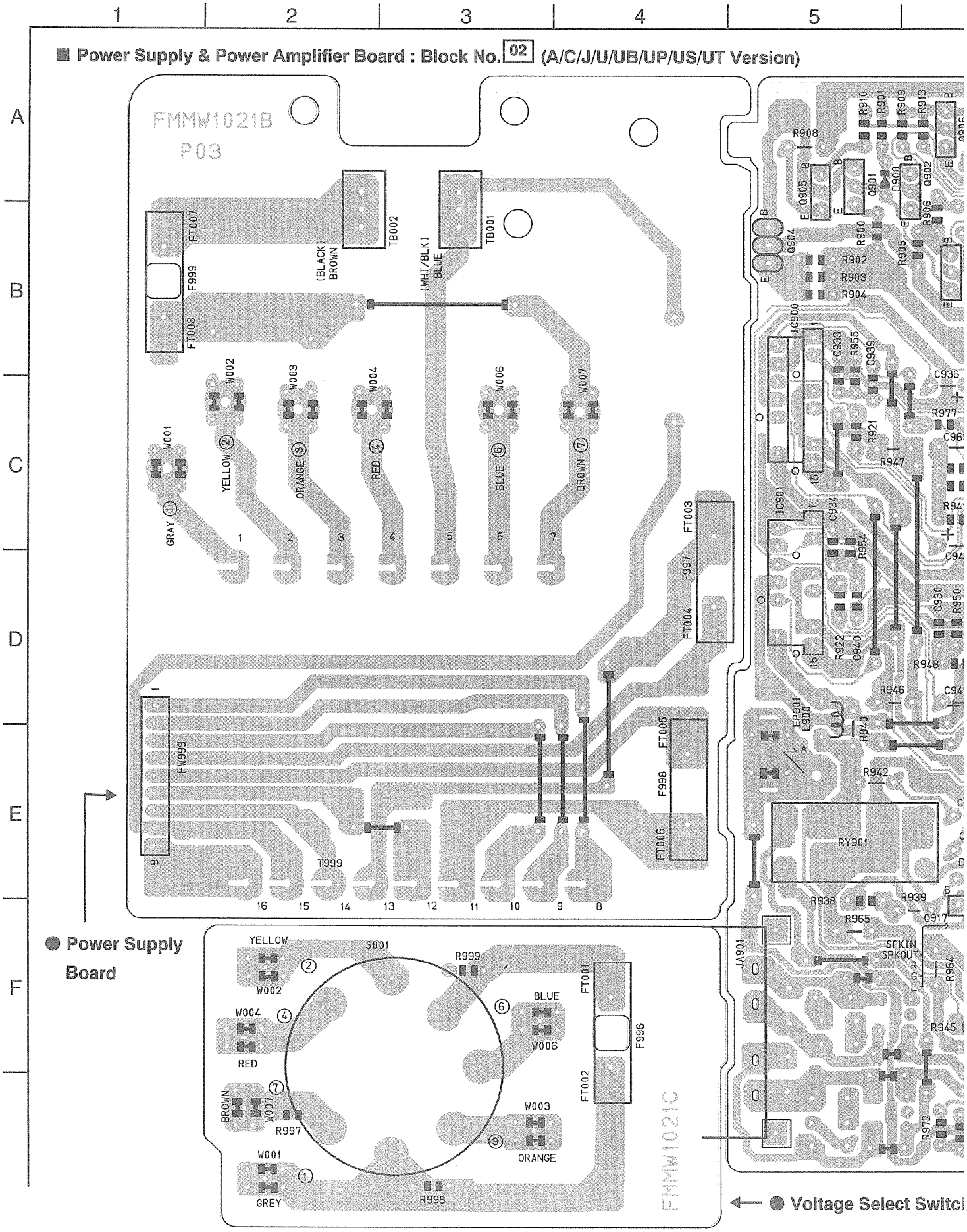

● Power Supply Board

● Voltage Select Switch

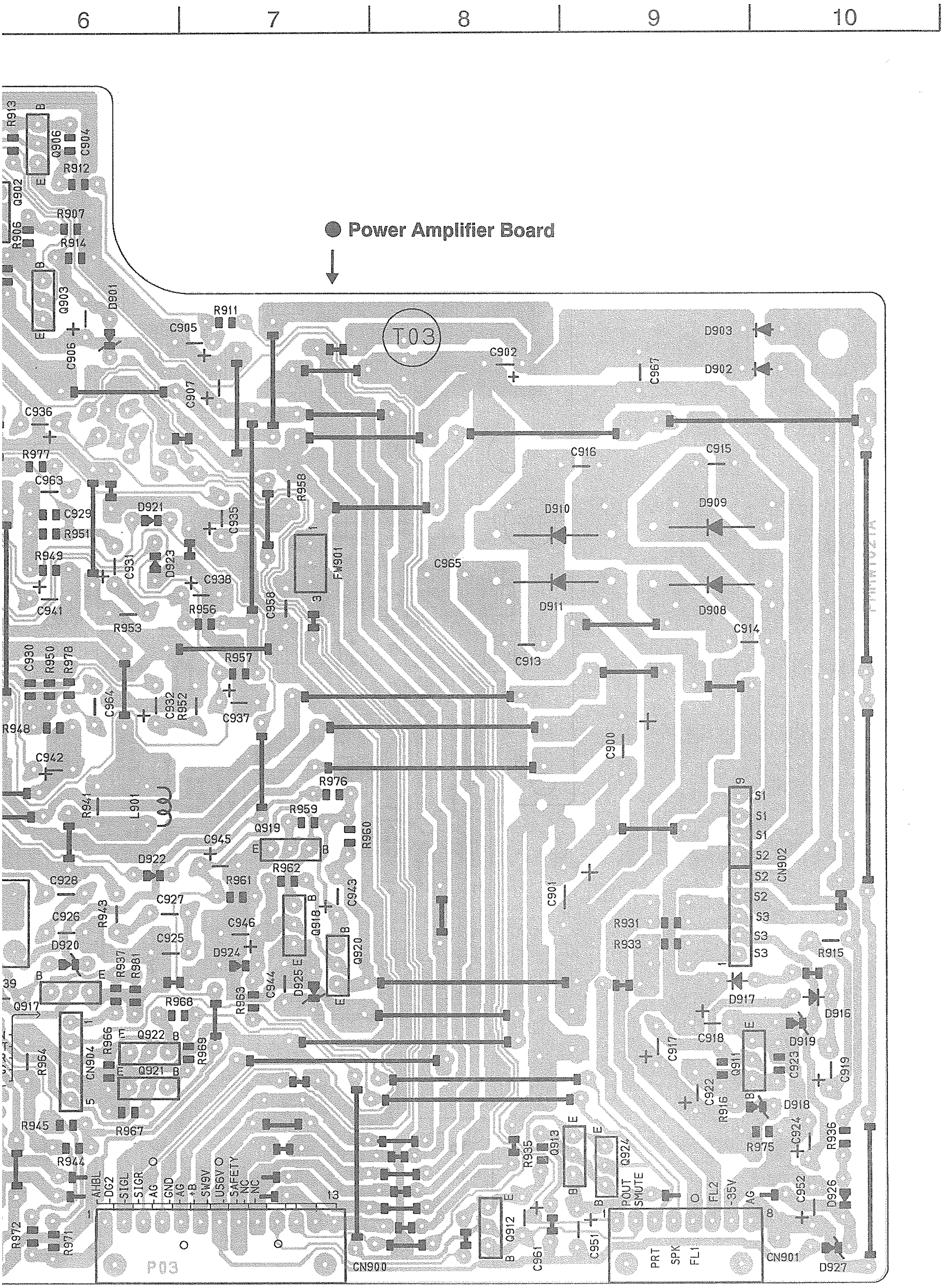

Fig.12-4

■ System CPU & Operation Switch Board : Block No. 03 (B/E/EN/G/VX Version)

● System CPU Board →

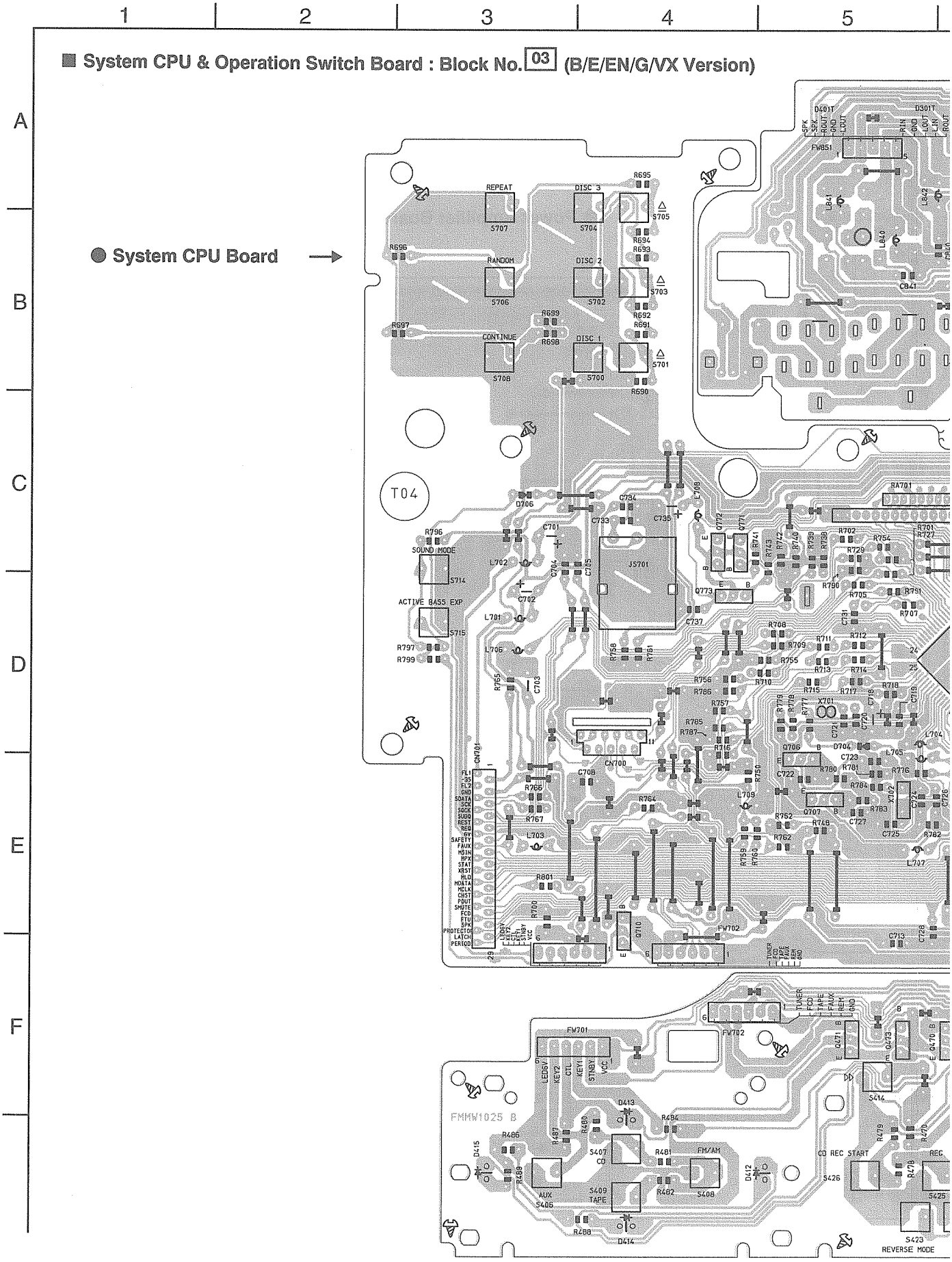

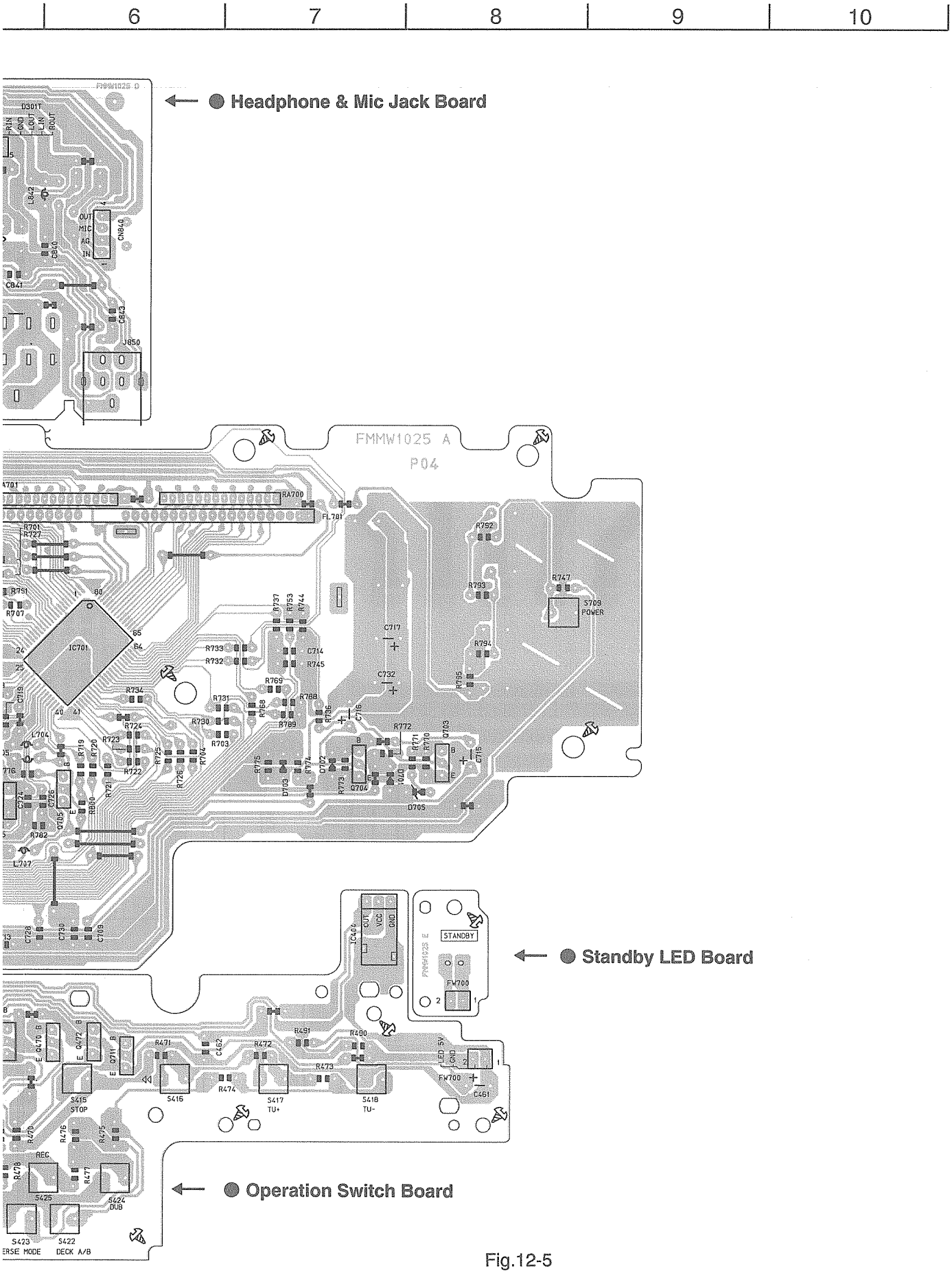
6
7
8
9
10
Headphone & Mic Jack Board
FMMW1025 A
P04
IC701
S709
POWER
Standby LED Board
STANDBY
Operation Switch Board
S415
STOP
S416
S417
TU+
S418
TU-
REC
S425
S424
DUB
S423
S422
DECK A/B

Fig.12-5

■ System CPU & Operation Switch Board : Block No. 03 (A/C/J/U/UB/UP/US/UT Version)

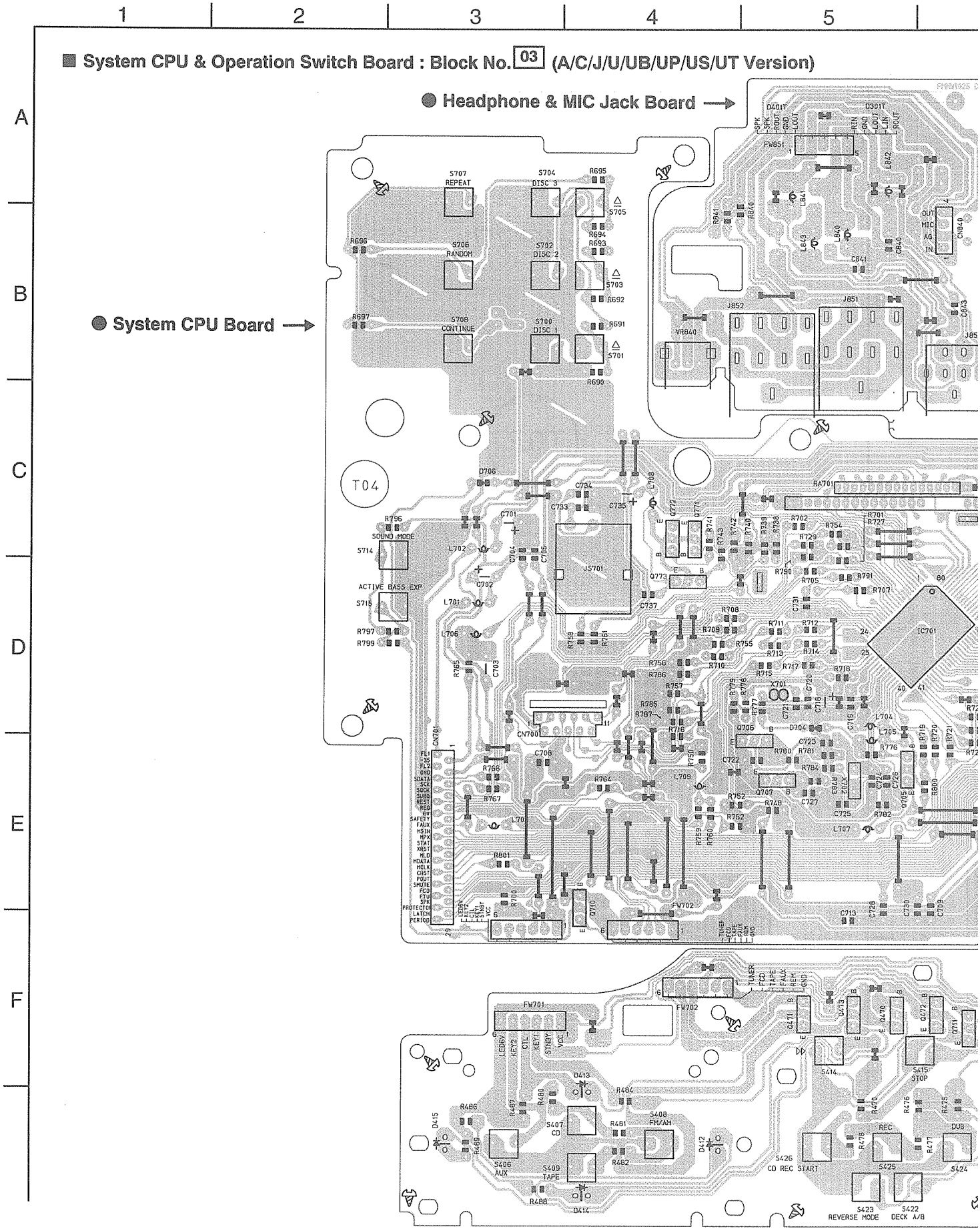

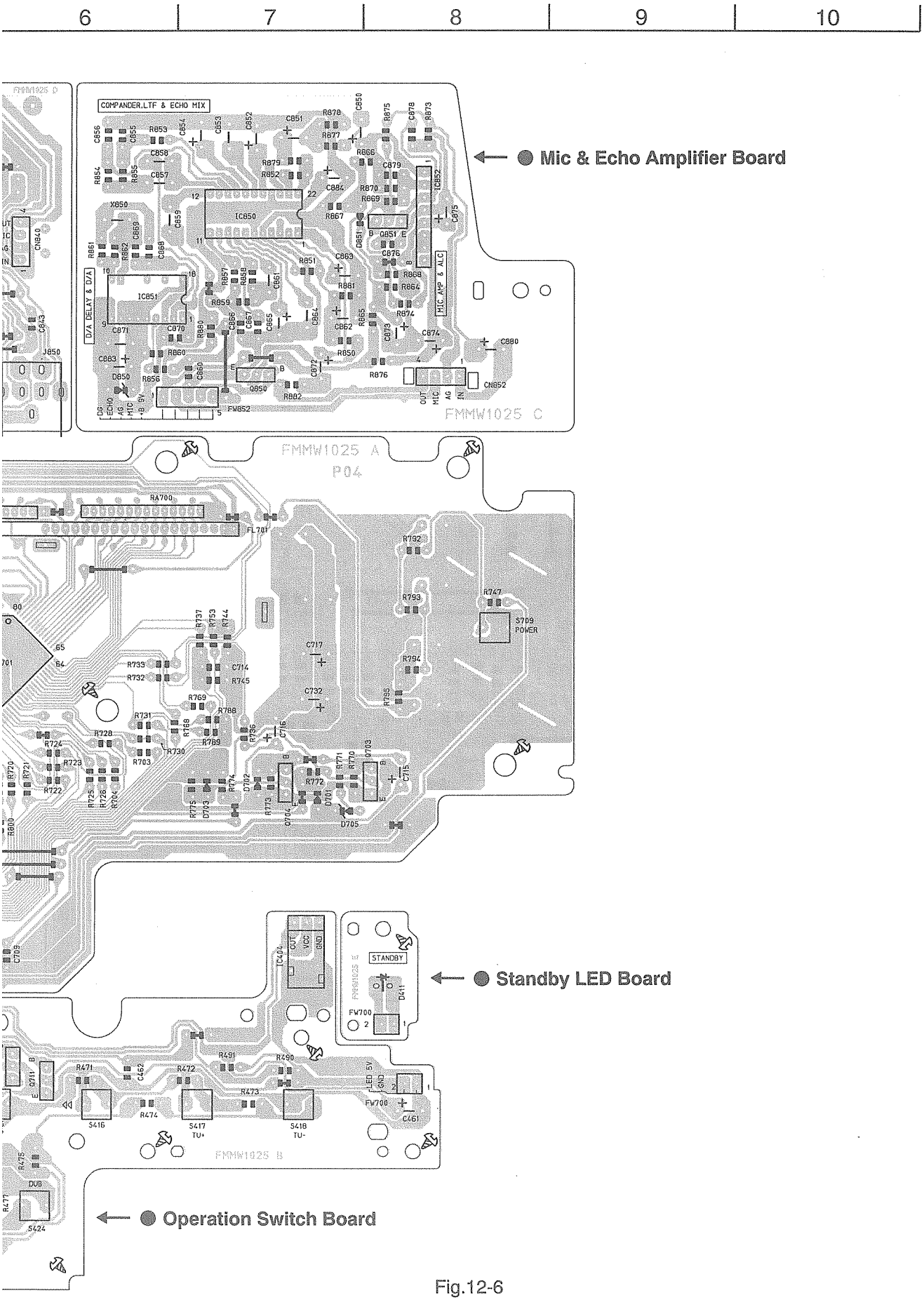
6
7
8
9
10
COMPANDER,LTF & ECHO MIX
D/A DELAY & D/A
MIC AMP & ALC
Mic & Echo Amplifier Board
FMMW1025 C
FMMW1025 A
P04
S709
POWER
STANDBY
Standby LED Board
S416
S417
TU+
S418
TU-
FMMW1025 B
Operation Switch Board

Fig.12-6

■ CD Servo Control Board : Block No. 04

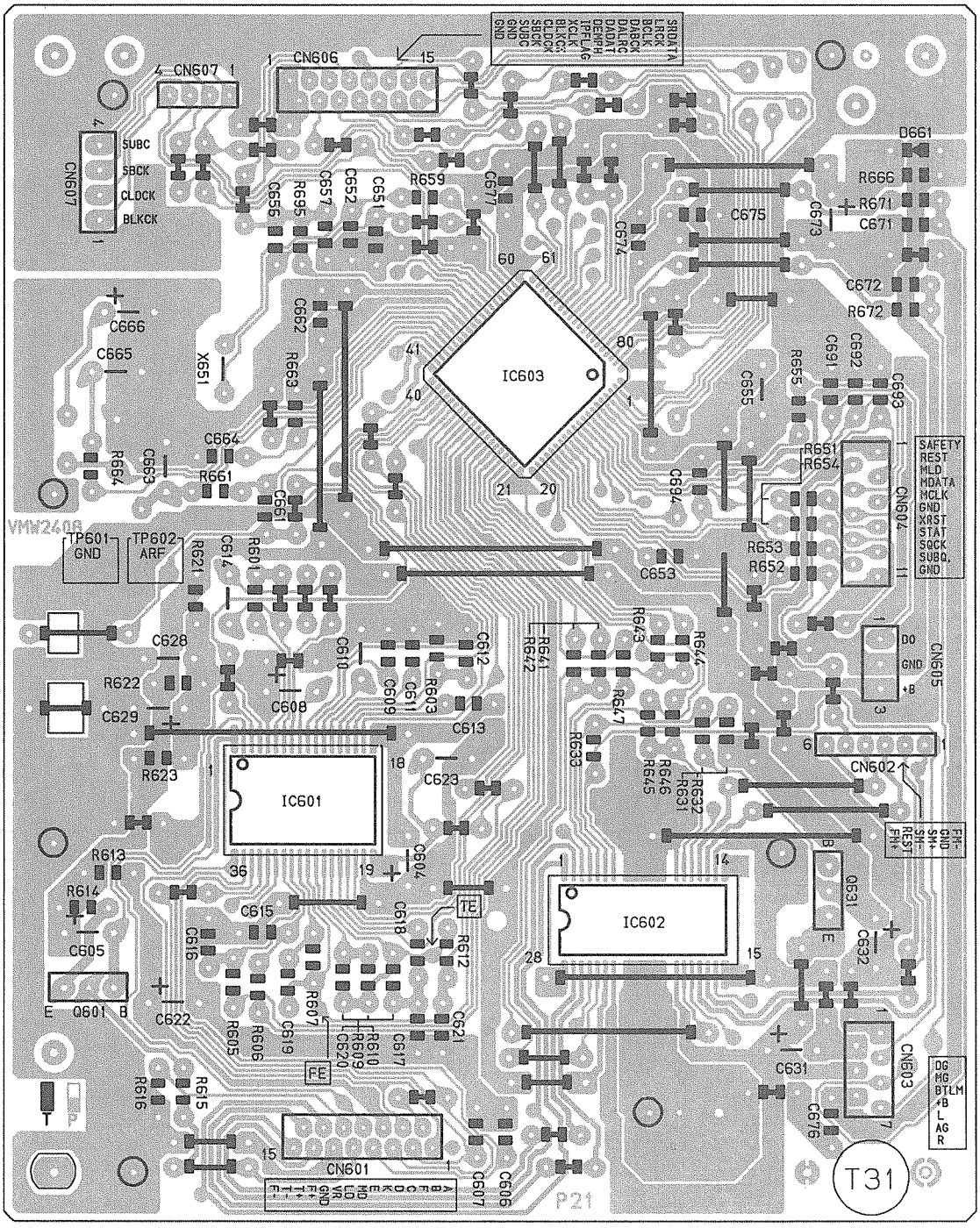

Fig.12-7

■ Actuator Motor Board : Block No. 05

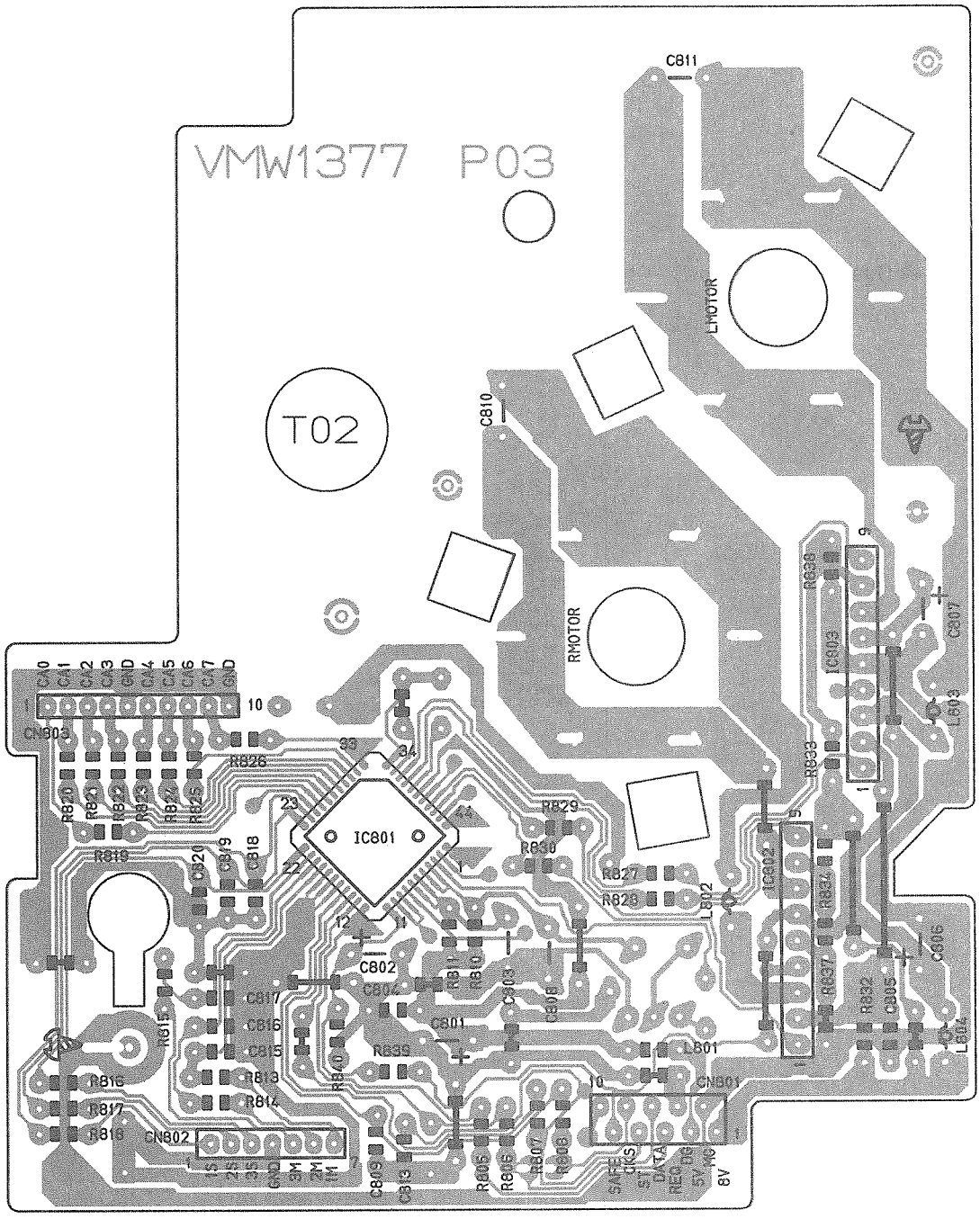

Fig.12-8

■ CD Tray Select Switch Board : Block No. 06

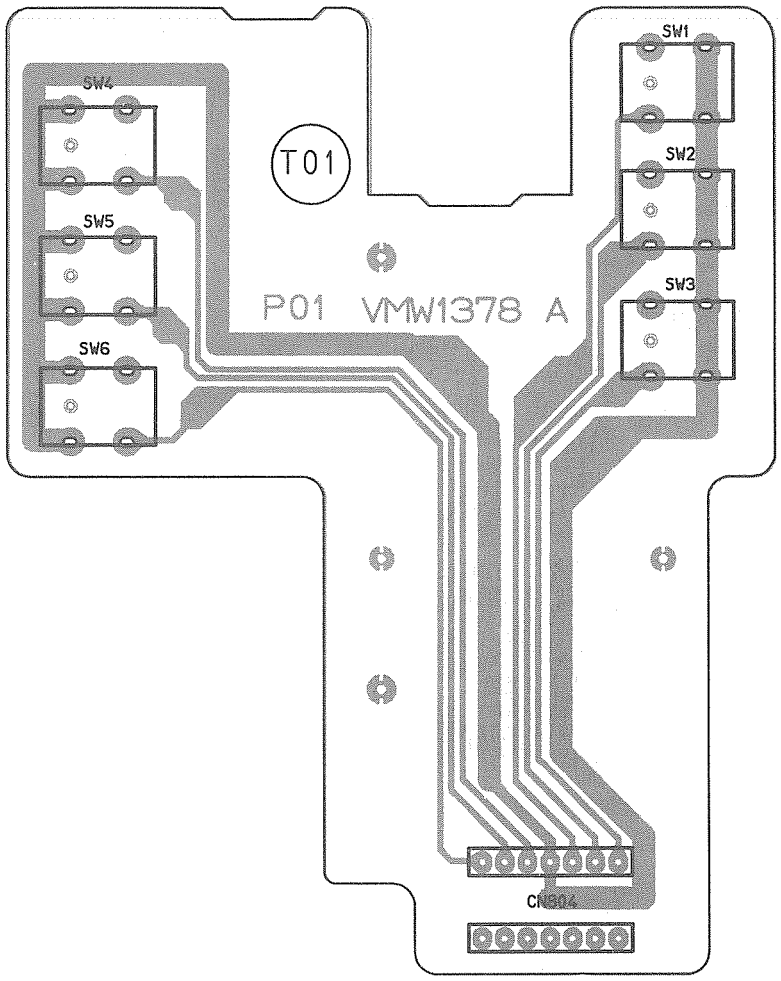

Fig.12-9

■ Cam Switch Board : Block No. 07

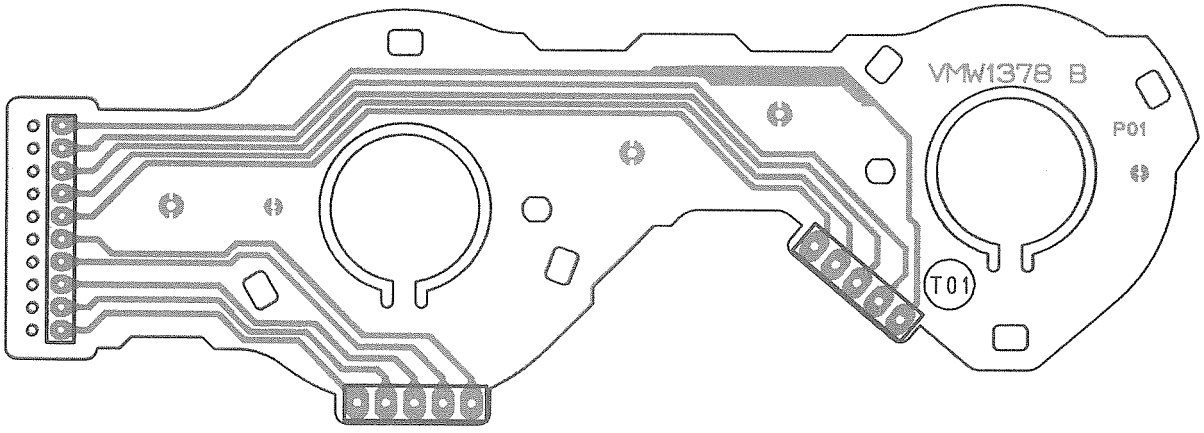

Fig.12-10

1 2 3 4 5

A B C D E F

■ Head Amplifier & Mechanism Control Board : Block No. 08

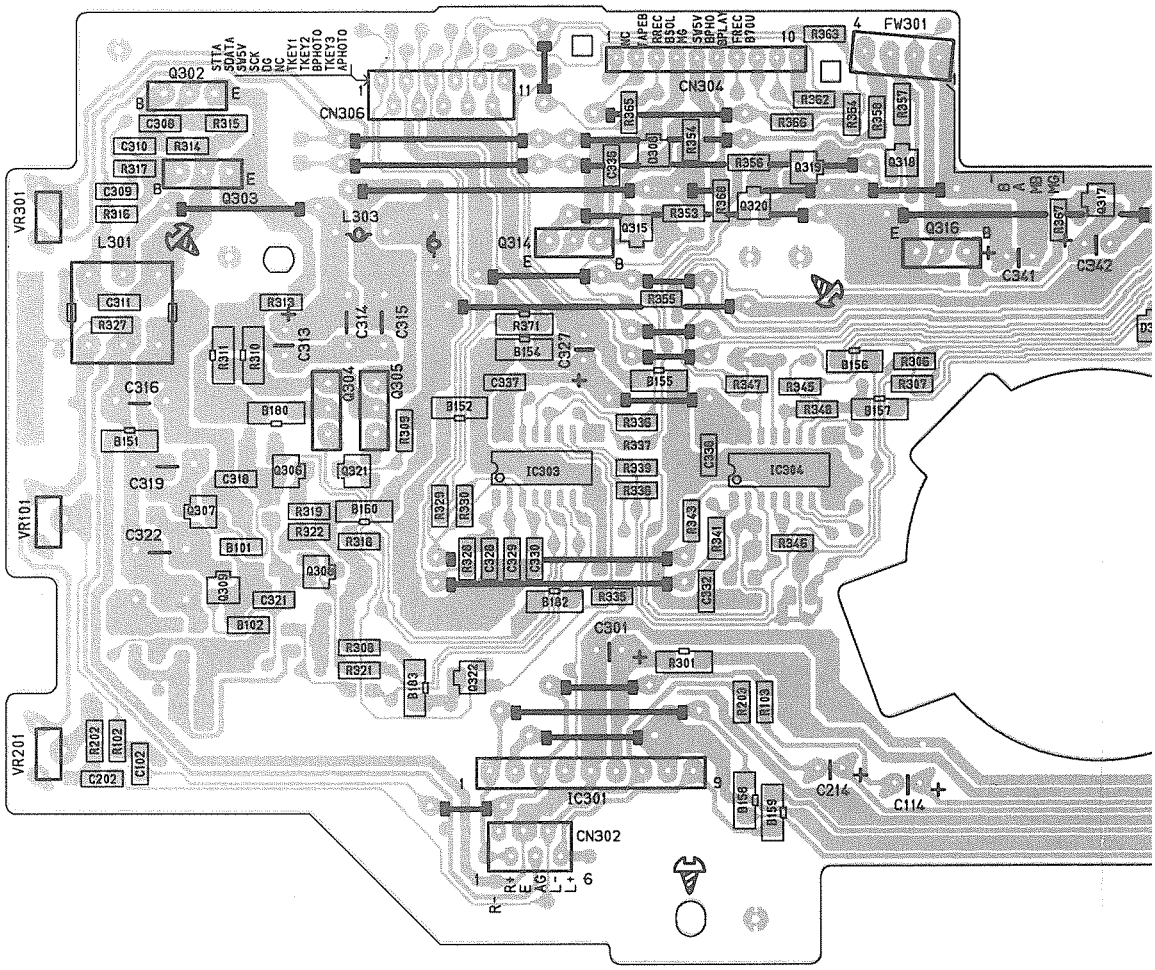

■ Reel Pulse Board : Block No. 09

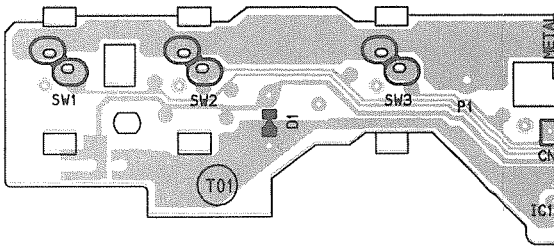

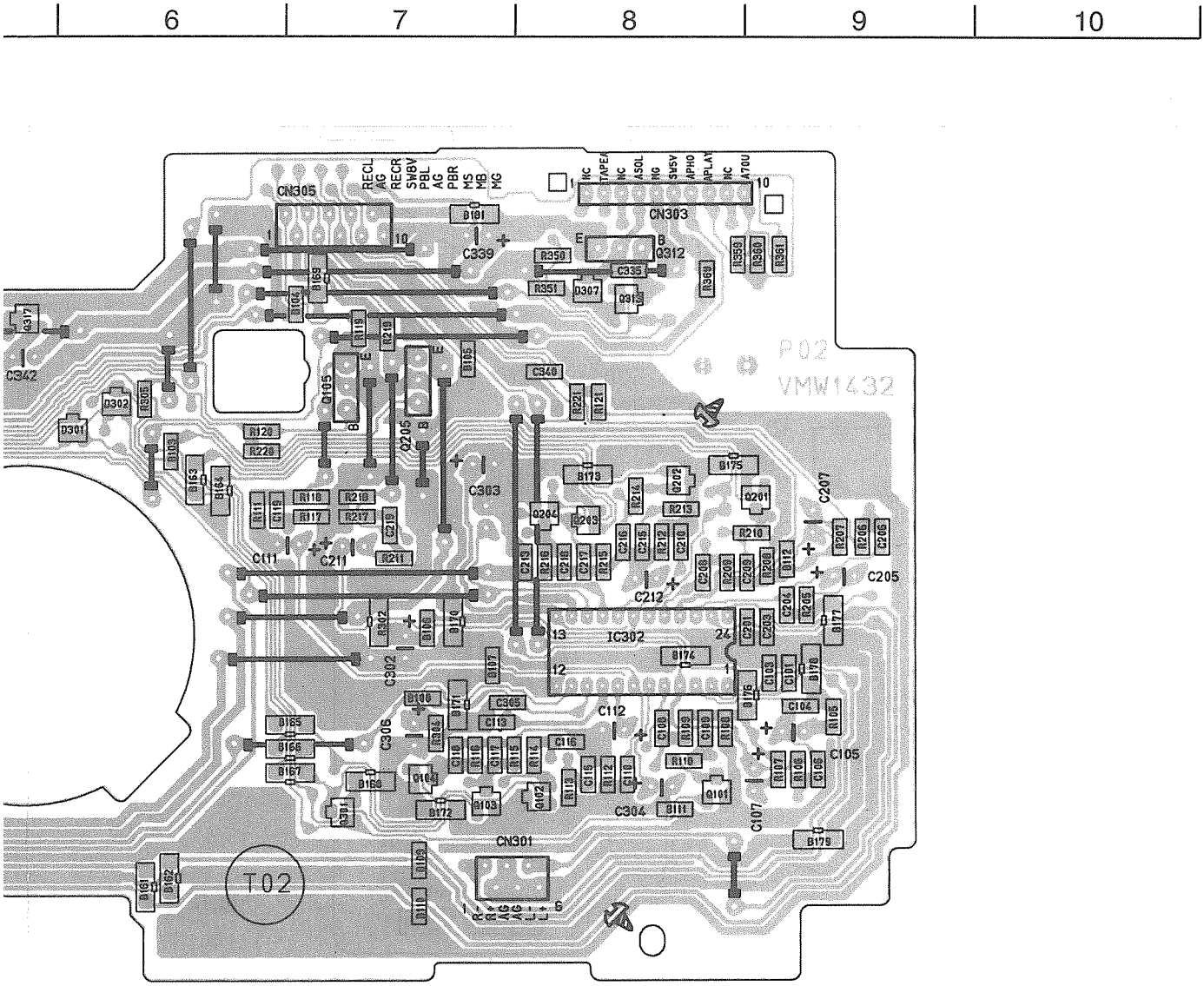

Fig.12-11

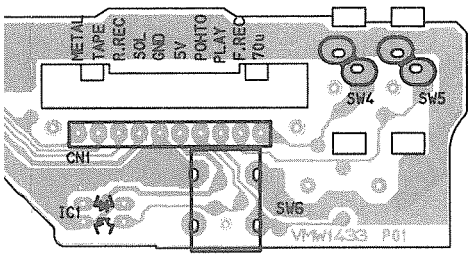

Fig.12-12

■ Main Amplifier Board (B/E/EN/G/VX Version)

BLOCK NO. 01

⚠	REF.	PARTS NO.	PARTS NAME	REMARKS	SUFFIX
	C 1	QCC11EM-223V	C.CAPACITOR	.022MF 20% 25V	
	C 2	QCXB1CM-332Y	C.CAPACITOR	3300PF 20% 16V	B,E,EN,G
	C 3	QCC11EM-473V	C.CAPACITOR	.047MF 20% 25V	
	C 4	QCVB1CN-103Y	C.CAPACITOR	.010MF 30% 16V	
	C 5	QET41AM-107	E CAPACITOR	100MF 20% 10V	
	C 6	QCBB1HK-331Y	C.CAPACITOR	330PF 10% 50V	
	C 7	QCFB1HZ-104Y	C.CAPACITOR	.10MF +80:-20%	
	C 8	QCS11HJ-150	C.CAPACITOR	15PF 5% 50V	B,E,EN,G
	C 11	QCC11EM-473V	C.CAPACITOR	.047MF 20% 25V	
	C 12	QCS11HJ-150	C.CAPACITOR	15PF 5% 50V	
	C 13	QCVB1CN-103Y	C.CAPACITOR	.010MF 30% 16V	
	C 16	QFV41HJ-104ZM	FILM CAPACITOR	.10MF 5% 50V	
	C 17	QCBB1HK-102Y	C.CAPACITOR	.010MF 20% 16V	
	C 18	QCBB1HK-471Y	C.CAPACITOR	C.CAPACITOR	
	C 19	QCBB1HK-471Y	C.CAPACITOR	C.CAPACITOR	
	C 21	QCC11EM-473V	C.CAPACITOR	.047MF 20% 25V	
	C 30	QEK41CM-476	E.CAPACITOR	47MF 20% 16V	
	C 31	QCS31HJ-390Z	C.CAPACITOR	39PF 5% 50V	
	C 32	QCBB1HK-102Y	C.CAPACITOR	1000PF 10% 50V	
	C 33	QEK61AM-107Z	E.CAPACITOR	100MF 20% 10V	
	C 34	QCS11HJ-150	C.CAPACITOR	15PF 5% 50V	
	C 35	QCVB1CN-103Y	C.CAPACITOR	.010MF 30% 16V	
	C 36	QEK41CM-106	E.CAPACITOR	10MF 20% 16V	
	C 37	QCVB1CN-103Y	C.CAPACITOR	.010MF 30% 16V	
	C 38	QCC11EM-473V	C.CAPACITOR	.047MF 20% 25V	
	C 39	QCC11EM-473V	C.CAPACITOR	.047MF 20% 25V	
	C 40	QCVB1CN-103Y	C.CAPACITOR	.010MF 30% 16V	
	C 41	QEK41HM-104	E.CAPACITOR	.10MF 20% 50V	
	C 42	QEK41HM-474	E.CAPACITOR	.47MF 20% 50V	
	C 43	QEK61HM-335ZN	E.CAPACITOR	3.3MF 20% 50V	B,E,EN,G
	C 44	QCBB1HK-221Y	C.CAPACITOR	220PF 10% 50V	
	C 45	QEK41CM-106	E.CAPACITOR	10MF 20% 16V	
	C 46	QCC11EM-223V	C.CAPACITOR	.022MF 20% 25V	
	C 47	QCVB1CM-103Y	C.CAPACITOR	.010MF 20% 16V	
	C 49	QFLC1HJ-183ZM	M CAPACITOR	.018MF 5% 50V	
	C 50	QFLC1HJ-183ZM	M CAPACITOR	.018MF 5% 50V	
	C 51	QEK41HM-105	E.CAPACITOR	1.0MF 20% 50V	
	C 52	QEK41HM-105	E.CAPACITOR	1.0MF 20% 50V	
	C 53	QCBB1HK-102Y	C.CAPACITOR	1000PF 10% 50V	B,E,EN,G
	C 54	QEK61HM-335ZN	E.CAPACITOR	3.3MF 20% 50V	B,E,EN,G
	C 55	QCS11HJ-120	C.CAPACITOR	12PF 5% 50V	
	C 60	QEK61AM-107Z	E.CAPACITOR	100MF 20% 10V	
	C 61	QCS11HJ-120	C.CAPACITOR	12PF 5% 50V	
	C 62	QCS11HJ-120	C.CAPACITOR	12PF 5% 50V	
	C 63	QCC11EM-473V	C.CAPACITOR	.047MF 20% 25V	
	C 65	QCBB1HK-102Y	C.CAPACITOR	1000PF 10% 50V	
	C 66	QCBB1HK-151Y	C.CAPACITOR	150PF 10% 50V	
	C 67	QCBB1HK-151Y	C.CAPACITOR	150PF 10% 50V	VX
	C 68	QCBB1HK-101Y	C.CAPACITOR	100PF 10% 50V	B,E,EN,G
	C 69	QFV41HJ-105	TF.CAPACITOR	1.0MF 5% 50V	
	C 70	QCXB1CM-392Y	C.CAPACITOR	3900PF 20% 16V	
	C 71	QET41CM-476	E CAPACITOR	47MF 20% 16V	
	C 72	QCBB1HK-102Y	C.CAPACITOR	1000PF 10% 50V	
	C 101	QCS11HJ-330	C.CAPACITOR	33PF 5% 50V	
	C 102	QCS11HJ-100	C.CAPACITOR	10PF 5% 50V	

BLOCK NO. 01

⚠	REF.	PARTS NO.	PARTS NAME	REMARKS	SUFFIX
	C 103	QFV71HJ-474ZM	E CAPACITOR	.47MF 5% 50V	
	C 104	EETB1CM-226E	E.CAPACITOR		
	C 106	QETN1HM-335Z	E CAPACITOR	3.3MF 20% 50V	
	C 108	QTE1V06-106Z	E.CAPACITOR		
	C 110	QFV71HJ-124ZM	FILM CAPACITOR	.12MF 5% 50V	
	C 111	QFV71HJ-124ZM	FILM CAPACITOR	.12MF 5% 50V	
	C 112	QET41AM-107	E CAPACITOR	100MF 20% 10V	
	C 113	QTE1V06-106Z	E.CAPACITOR		
	C 116	QETC1HM-106ZN	E.CAPACITOR	10MF 20% 50V	
	C 122	QETN1HM-335Z	E CAPACITOR	3.3MF 20% 50V	
	C 130	QCS11HJ-330	C.CAPACITOR	33PF 5% 50V	
	C 201	QCS11HJ-330	C.CAPACITOR	33PF 5% 50V	
	C 202	QCS11HJ-100	C.CAPACITOR	10PF 5% 50V	
	C 203	QFV41HJ-224ZM	E CAPACITOR	.22MF 5% 50V	
	C 204	EETB1CM-226E	E.CAPACITOR		
	C 206	QETN1HM-335Z	E CAPACITOR	3.3MF 20% 50V	
	C 208	QTE1V06-106Z	E.CAPACITOR		
	C 210	QFV71HJ-124ZM	FILM CAPACITOR	.12MF 5% 50V	
	C 211	QFV71HJ-124ZM	FILM CAPACITOR	.12MF 5% 50V	
	C 212	QET41AM-107	E CAPACITOR	100MF 20% 10V	
	C 213	QTE1V06-106Z	E.CAPACITOR		
	C 216	QETC1HM-106ZN	E.CAPACITOR	10MF 20% 50V	
	C 222	QETN1HM-335Z	E CAPACITOR	3.3MF 20% 50V	
	C 230	QCS11HJ-330	C.CAPACITOR	33PF 5% 50V	
	C 301	QCBB1HK-102Y	C.CAPACITOR	1000PF 10% 50V	
	C 303	QETC1HM-225ZN	E.CAPACITOR	1.2MF 20% 50V	
	C 305	QFLC1HJ-223ZM	M CAPACITOR	.022MF 5% 50V	
	C 306	EETB1HM-475E	E.CAPACITOR		
	C 307	EETB1HM-475E	E.CAPACITOR		
	C 308	EETB1CM-226E	E.CAPACITOR		
	C 309	QCS11HJ-150	C.CAPACITOR	15PF 5% 50V	
	C 310	QCBB1HK-471Y	C.CAPACITOR	470PF 10% 50V	
	C 311	QCS11HJ-150	C.CAPACITOR	15PF 5% 50V	
	C 312	QCBB1HK-151Y	C.CAPACITOR	150PF 10% 50V	
	C 313	QCBB1HK-471Y	C.CAPACITOR	470PF 10% 50V	
	C 314	QETC1HM-224Z	E.CAPACITOR	.22MF 20% 50V	
	C 315	QFLC1HJ-103ZM	M CAPACITOR	.010MF 5% 50V	
	C 316	QFLC1HJ-393ZM	M CAPACITOR	.039MF 5% 50V	
	C 317	QFLC1HJ-473ZM	M CAPACITOR	.047MF 5% 50V	
	C 318	QFLC1HJ-103ZM	M CAPACITOR	.010MF 5% 50V	
	C 319	QFLC1HJ-393ZM	M CAPACITOR	.039MF 5% 50V	
	C 320	QFLC1HJ-473ZM	M CAPACITOR	.047MF 5% 50V	
	C 321	EETB1EM-106E	E.CAPACITOR		
	C 322	EETB1AM-476E	E.CAPACITOR		
	C 323	QET41EM-106	E CAPACITOR	10MF 20% 25V	
	C 324	EETC1CM-106ZJC	E.CAPACITOR		
	C 325	EETB1HM-105E	E.CAPACITOR		
	C 327	QFV71HJ-184ZM	M.M.CAPACITOR	.18MF 5% 50V	
	C 329	QETB1HM-474N	E.CAPACITOR	.47MF 20% 50V	
	C 332	QFLC1HJ-103ZM	M CAPACITOR	.010MF 5% 50V	
	C 334	QFLC1HJ-223ZM	M CAPACITOR	.022MF 5% 50V	
	C 335	QET41AM-107	E CAPACITOR	100MF 20% 10V	
	C 351	EETB1CM-476	E.CAPACITOR		
	C 352	QET41EM-106	E CAPACITOR	10MF 20% 25V	
	C 362	QCBB1HK-151Y	C.CAPACITOR	150PF 10% 50V	

BLOCK NO. 01

⚠	REF.	PARTS NO.	PARTS NAME	REMARKS	SUFFIX
	C 363	QET41AM-108	E CAPACITOR	1000MF 20% 10V	
	C 364	QET41AM-108	E CAPACITOR	1000MF 20% 10V	
	C 380	QCS11HJ-330	C.CAPACITOR	33PF 5% 50V	
	C 381	QCXB1CM-182Y	C.CAPACITOR	1800PF 20% 16V	
	C 382	QFLC1HJ-153ZM	M CAPACITOR	.015MF 5% 50V	
	C 383	QCBB1HK-681Y	C.CAPACITOR	680PF 10% 50V	
	C 384	EETB1HM-105E	E.CAPACITOR		
	C 385	QETC1HM-476ZM	E.CAPACITOR	47MF 20% 50V	
	C 908	EETB1HM-475E	E.CAPACITOR		
	C 909	EETB1CM-226E	E.CAPACITOR		
	C 910	EETC1CM-106ZJC	E.CAPACITOR		
	C 911	QFLC1HJ-103ZM	M CAPACITOR	.010MF 5% 50V	
	C 912	QET41AM-107	E CAPACITOR	100MF 20% 10V	
	C 920	QFLC1HJ-103ZM	M CAPACITOR	.010MF 5% 50V	
	C 921	QET41AM-107	E CAPACITOR	100MF 20% 10V	
	C 968	QCVB1CM-103Y	C.CAPACITOR	.010MF 20% 16V	
	CF 1	VCF2M3B-104	CERAMIC FILTER		B,E,EN,G
	CF 1	VFC2M3B-106	CERAMIC FILTER		VX
	CF 2	VFC2S3B-106	CERAMIC FILTER		VX
	CF 2	VCF2S3B-101	CERAMIC FILTER		B,E,EN,G
	CF 3	VCF1Z2Z-115Z	CERAMIC FILTER		
	CF 4	CMU2-456A05	CERA LOCK		
	CN302	VMC0332-010V	CONNECTOR		
	CN303	VMC0163-029	CONNECTOR		
	CN304	VMC0332-007V	CONNECTOR		
	CN305	VMC0332-011V	CONNECTOR		
	CN306	VMC0332-010V	CONNECTOR		
	CN307	EMV5125-008	CONNECTOR		
	CN308	EMV5125-013	CONNECTOR		
	CN313	EMV7145-003Z	CONNECTOR		
	D 1	1SS133	SI DIODE		
	D 2	1SS133	SI DIODE		
	D 3	1SS133	SI DIODE		
	D 4	1SS133	SI DIODE		
	D 7	1SS133	SI DIODE		
	D 300	RB721Q	DIODE		
	D 301	1SS133	SI DIODE		
	D 302	1SS133	SI DIODE		
	D 303	RB721Q	DIODE		
	D 304	1SS133	SI DIODE		
	D 305	MTZ5.1JAT-77	ZENER DIODE		
	D 306	1SS133	SI DIODE		
	D 307	1SS133	SI DIODE		
	D 308	1SS133	SI DIODE		
	D 310	1SS133	SI DIODE		
	D 311	1SS133	SI DIODE		
	D 312	1SS133	SI DIODE		
	D 313	1SS133	SI DIODE		
	D 314	1SS133	SI DIODE		
	D 315	1SR35-100	SI DIODE		
	D 318	1SS133	SI DIODE		
	D 319	1SS133	SI DIODE		
	D 322	1SS133	SI DIODE		
	D 380	1SS133	SI DIODE		
	D 904	MTZ4.3JB	ZENER DIODE		

BLOCK NO. 01

⚠	REF.	PARTS NO.	PARTS NAME	REMARKS	SUFFIX
	D 905	1SS133	SI DIODE		
	D 906	1SS133	SI DIODE		
	D 907	MTZ3.9JB	ZENER DIODE		
	D 912	RD5.6JSAB1	ZENER DIODE		
	D 913	1SS133	SI DIODE		
	D 915	1SS133	SI DIODE		
	D 928	MTZ2.4JB	ZENER DIODE		
	EP001	E409182-001SM	GRAND TERMINAL		
	IC 1	TA2057N	IC		
	IC 2	LC72136N	IC		
	IC301	NJM4580L	IC		
	IC302	BH3854AS	IC		
	IC303	NJM4580L	IC		
	J 1	EMB41YV-302K	ANT TERMINAL		
	JA301	EMN00TV-222AJ2	PIN JACK		
	L 1	VQZ0098-101	COIL BLOCK		
	L 4	VQP0018-221	INDUCTOR		
	L 10	VQZ0069-002S	TRAP COIL		B,E,EN,G
	L 11	VQP0018-2R7	INDUCTOR		
	L 302	VQZ0048-009	INDUCTOR		B,E,EN,G
	L 303	VQZ0048-009	INDUCTOR		B,E,EN,G
	L 304	VQZ0048-009	INDUCTOR		B,E,EN,G
	L 305	VQZ0048-009	INDUCTOR		
	L 306	VQP0028-100Z	INDUCTOR		
	PP301	VMZ0015-005	POST PIN		
	PP302	VMZ0015-005	POST PIN		
	Q 1	2SC1923	TRANSISTOR		
	Q 2	DTA114YS	TRANSISTOR		
	Q 3	2SC2785	TRANSISTOR		
	Q 4	2SC2785	TRANSISTOR		
	Q 6	DTA114YS	TRANSISTOR		
	Q 16	2SC2785	TRANSISTOR		B,E,EN,G
	Q 301	2SD2144S(VW)	TRANSISTOR		
	Q 302	2SD2144S(VW)	TRANSISTOR		
	Q 303	DTA114YS	TRANSISTOR		
	Q 304	2SK246(GR,BL)	FET		
	Q 305	2SK246(GR,BL)	FET		
	Q 306	DTC144TSTP	TRANSISTOR		
	Q 307	2SD2144S(VW)	TRANSISTOR		
	Q 308	2SD2144S(VW)	TRANSISTOR		
	Q 309	2SC2785	TRANSISTOR		
	Q 310	2SC2785	TRANSISTOR		
	Q 311	DTA114ES	TRANSISTOR		
	Q 312	2SC2785	TRANSISTOR		
	Q 314	DTA144ES	D.TRANSISTOR		
	Q 320	DTC144TSTP	TRANSISTOR		
	Q 380	2SC2785	TRANSISTOR		
	Q 381	2SC2785	TRANSISTOR		
	Q 907	2SA1175	TRANSISTOR		
	Q 908	2SC2785	TRANSISTOR		
	Q 909	2SB1375	TRANSISTOR		
	Q 910	2SC2785	TRANSISTOR		
	Q 913	2SB1375	TRANSISTOR		
	Q 914	2SC2785	TRANSISTOR		
	Q 915	2SC2785	TRANSISTOR		

BLOCK NO. 01

⚠	REF.	PARTS NO.	PARTS NAME	REMARKS	SUFFIX
	Q 916	2SC2785	TRANSISTOR		
	R 1	QRD161J-102	CARBON RESISTOR	1.0K 5% 1/6W	
	R 2	QRD161J-181	CARBON RESISTOR	180 5% 1/6W	
	R 3	QRD161J-101	CARBON RESISTOR	100 5% 1/6W	
	R 10	QRD161J-152	CARBON RESISTOR	1.5K 5% 1/6W	
	R 12	QRD161J-102	CARBON RESISTOR	1.0K 5% 1/6W	
	R 13	QRD161J-104	CARBON RESISTOR	100K 5% 1/6W	
	R 15	QRD161J-103	CARBON RESISTOR	10K 5% 1/6W	
	R 16	QRD161J-103	CARBON RESISTOR	10K 5% 1/6W	
	R 20	QRD161J-331	CARBON RESISTOE	330 5% 1/6W	
	R 21	QRD161J-224	CARBON RESISTOR	220K 5% 1/6W	
	R 22	QRD161J-331	CARBON RESISTOE	330 5% 1/6W	
	R 24	QRD161J-271	CARBON RESISTOR	270 5% 1/6W	
	R 25	QRD161J-473	CARBON RESISTOR	47K 5% 1/6W	
	R 26	QRD161J-273	CARBON RESISTOR	27K 5% 1/6W	B,E,EN,G
	R 27	QRD161J-223	CARBON RESISTOR	22K 5% 1/6W	
	R 29	QRD161J-473	CARBON RESISTOR	47K 5% 1/6W	
	R 30	QRD161J-103	CARBON RESISTOR	10K 5% 1/6W	
	R 31	QRD161J-103	CARBON RESISTOR	10K 5% 1/6W	
	R 32	QRD161J-363	CARBON RESISTOR	36K 5% 1/6W	VX
	R 34	QRD161J-222	CARBON RESISTOR	2.2K 5% 1/6W	
	R 35	QRD161J-222	CARBON RESISTOR	2.2K 5% 1/6W	
	R 36	QRD161J-103	CARBON RESISTOR	10K 5% 1/6W	
	R 37	QRD167J-562	CARBON RESISTOR	5.6K 5% 1/6W	
	R 38	QRD161J-392	CARBON RESISTOR	3.9K 5% 1/6W	
	R 39	QRD161J-392	CARBON RESISTOR	3.9K 5% 1/6W	
	R 42	QRD161J-102	CARBON RESISTOR	1.0K 5% 1/6W	
	R 43	QRD161J-102	CARBON RESISTOR	1.0K 5% 1/6W	
	R 44	QRD161J-102	CARBON RESISTOR	1.0K 5% 1/6W	
	R 45	QRD161J-102	CARBON RESISTOR	1.0K 5% 1/6W	
	R 46	QRD161J-104	CARBON RESISTOR	100K 5% 1/6W	
	R 47	QRD161J-103	CARBON RESISTOR	10K 5% 1/6W	
	R 48	QRD161J-331	CARBON RESISTOE	330 5% 1/6W	
	R 49	QRD161J-102	CARBON RESISTOR	1.0K 5% 1/6W	
	R 52	QRD161J-472	CARBON RESISTOR	4.7K 5% 1/6W	
	R 54	QRD161J-472	CARBON RESISTOR	4.7K 5% 1/6W	
	R 55	QRD161J-182	CARBON RESISTOR	1.8K 5% 1/6W	
	R 56	QRD167J-332	CARBON RESISTOR	3.3K 5% 1/6W	
	R 57	QRD161J-102	CARBON RESISTOR	1.0K 5% 1/6W	
	R 60	QRD161J-102	CARBON RESISTOR	1.0K 5% 1/6W	
	R 61	QRD161J-102	CARBON RESISTOR	1.0K 5% 1/6W	
	R 64	QRD161J-473	CARBON RESISTOR	47K 5% 1/6W	
	R 65	QRD161J-222	CARBON RESISTOR	2.2K 5% 1/6W	
	R 66	QRD161J-222	CARBON RESISTOR	2.2K 5% 1/6W	
	R 69	QRD161J-103	CARBON RESISTOR	10K 5% 1/6W	
	R 70	QRD161J-393	CARBON RESISTOR	39K 5% 1/6W	B,E,EN,G
	R 71	QRD161J-823	CARBON RESISTOR	82K 5% 1/6W	B,E,EN,G
	R 72	QRD161J-122	CARBON RESISTOR	1.2K 5% 1/6W	B,E,EN,G
	R 73	QRD161J-222	CARBON RESISTOR	2.2K 5% 1/6W	B,E,EN,G
	R 74	QRD167J-332	CARBON RESISTOR	3.3K 5% 1/6W	B,E,EN,G
	R 75	QRD161J-822	CARBON RESISTOR	8.2K 5% 1/6W	B,E,EN,G
	R 101	QRD161J-114	CARBON RESISTOR	110K 5% 1/6W	
	R 102	QRD161J-102	CARBON RESISTOR	1.0K 5% 1/6W	
	R 103	QRD161J-101	CARBON RESISTOR	100 5% 1/6W	
	R 104	QRD161J-393	CARBON RESISTOR	39K 5% 1/6W	

BLOCK NO. 01

⚠	REF.	PARTS NO.	PARTS NAME	REMARKS	SUFFIX
	R 107	QRD161J-104	CARBON RESISTOR	100K 5% 1/6W	
	R 108	QRD161J-362	CARBON RESISTOR	3.6K 5% 1/6W	
	R 109	QRD161J-303Y	CARBON RESISTOR	30K 5% 1/6W	
	R 110	QRD161J-184	CARBON RESISTOR	180K 5% 1/6W	
	R 111	QRD161J-563	CARBON RESISTOR	56K 5% 1/6W	
	R 112	QRD161J-102	CARBON RESISTOR	1.0K 5% 1/6W	
	R 113	QRD161J-104	CARBON RESISTOR	100K 5% 1/6W	
	R 114	QRD161J-105	CARBON RESISTOR	1.0M 5% 1/6W	
	R 116	QRD161J-124	CARBON RESISTOR	100K 5% 1/6W	
	R 117	QRD161J-222	CARBON RESISTOR	2.2K 5% 1/6W	
	R 118	QRD161J-222	CARBON RESISTOR	2.2K 5% 1/6W	
	R 119	QRD161J-822	CARBON RESISTOR	8.2K 5% 1/6W	
	R 120	QRD161J-822	CARBON RESISTOR	8.2K 5% 1/6W	
	R 121	QRD161J-102	CARBON RESISTOR	1.0K 5% 1/6W	
	R 122	QRD161J-472	CARBON RESISTOR	4.7K 5% 1/6W	
	R 123	QRD161J-474	CARBON RESISTOR	470K 5% 1/6W	
	R 124	QRD161J-472	CARBON RESISTOR	4.7K 5% 1/6W	
	R 125	QRD161J-103	CARBON RESISTOR	10K 5% 1/6W	
	R 130	QRD161J-184	CARBON RESISTOR	180K 5% 1/6W	
	R 201	QRD161J-114	CARBON RESISTOR	110K 5% 1/6W	
	R 202	QRD161J-102	CARBON RESISTOR	1.0K 5% 1/6W	
	R 203	QRD161J-101	CARBON RESISTOR	100 5% 1/6W	
	R 204	QRD161J-333	CARBON RESISTOR	33K 5% 1/6W	
	R 207	QRD161J-104	CARBON RESISTOR	100K 5% 1/6W	
	R 208	QRD161J-362	CARBON RESISTOR	3.6K 5% 1/6W	
	R 209	QRD161J-303Y	CARBON RESISTOR	30K 5% 1/6W	
	R 210	QRD161J-184	CARBON RESISTOR	180K 5% 1/6W	
	R 211	QRD161J-563	CARBON RESISTOR	56K 5% 1/6W	
	R 212	QRD161J-102	CARBON RESISTOR	1.0K 5% 1/6W	
	R 213	QRD161J-104	CARBON RESISTOR	100K 5% 1/6W	
	R 214	QRD161J-105	CARBON RESISTOR	1.0M 5% 1/6W	
	R 216	QRD161J-124	CARBON RESISTOR	100K 5% 1/6W	
	R 217	QRD161J-222	CARBON RESISTOR	2.2K 5% 1/6W	
	R 218	QRD161J-222	CARBON RESISTOR	2.2K 5% 1/6W	
	R 219	QRD161J-822	CARBON RESISTOR	8.2K 5% 1/6W	
	R 220	QRD161J-822	CARBON RESISTOR	8.2K 5% 1/6W	
	R 221	QRD161J-102	CARBON RESISTOR	1.0K 5% 1/6W	
	R 222	QRD161J-472	CARBON RESISTOR	4.7K 5% 1/6W	
	R 223	QRD161J-103	CARBON RESISTOR	10K 5% 1/6W	
	R 224	QRD161J-472	CARBON RESISTOR	4.7K 5% 1/6W	
	R 225	QRD161J-103	CARBON RESISTOR	10K 5% 1/6W	
	R 230	QRD161J-184	CARBON RESISTOR	180K 5% 1/6W	
	R 300	QRD161J-334	CARBON RESISTOR	330K 5% 1/6W	
	R 301	QRD161J-473	CARBON RESISTOR	47K 5% 1/6W	
	R 302	QRD161J-184	CARBON RESISTOR	180K 5% 1/6W	
	R 303	QRD161J-224	CARBON RESISTOR	220K 5% 1/6W	
	R 304	QRD161J-124	CARBON RESISTOR	120K 5% 1/6W	
	R 305	QRD161J-102	CARBON RESISTOR	1.0K 5% 1/6W	
	R 306	QRD161J-102	CARBON RESISTOR	1.0K 5% 1/6W	
	R 307	QRD161J-222	CARBON RESISTOR	2.2K 5% 1/6W	
	R 308	QRD161J-152	CARBON RESISTOR	1.5K 5% 1/6W	
	R 309	QRD161J-101	CARBON RESISTOR	100 5% 1/6W	
	R 310	QRD161J-223	CARBON RESISTOR	22K 5% 1/6W	
	R 311	QRD161J-124	CARBON RESISTOR	120K 5% 1/6W	
	R 313	QRD161J-302	CARBON RESISTOR	3.0K 5% 1/6W	

BLOCK NO. 01

⚠	REF.	PARTS NO.	PARTS NAME	REMARKS	SUFFIX
	R 315	QRD161J-222	CARBON RESISTOR	2.2K 5% 1/6W	
	R 316	QRD161J-474	CARBON RESISTOR	470K 5% 1/6W	
	R 318	QRD161J-104	CARBON RESISTOR	100K 5% 1/6W	
	R 320	QRD161J-104	CARBON RESISTOR	100K 5% 1/6W	
	R 327	QRD161J-223	CARBON RESISTOR	22K 5% 1/6W	
	R 328	QRD161J-223	CARBON RESISTOR	22K 5% 1/6W	
	R 347	QRD161J-153	CARBON RESISTOR	15K 5% 1/6W	
	R 350	QRD161J-223	CARBON RESISTOR	22K 5% 1/6W	
	R 353	QRD161J-823	CARBON RESISTOR	82K 5% 1/6W	
	R 354	QRD161J-823	CARBON RESISTOR	82K 5% 1/6W	
	R 355	QRD161J-105	CARBON RESISTOR	1.0M 5% 1/6W	
	R 356	QRD161J-105	CARBON RESISTOR	1.0M 5% 1/6W	
	R 357	QRD161J-102	CARBON RESISTOR	1.0K 5% 1/6W	
	R 358	QRD161J-102	CARBON RESISTOR	1.0K 5% 1/6W	
	R 361	QRD167J-562	CARBON RESISTOR	5.6K 5% 1/6W	
	R 380	QRD161J-225	CARBON RESISTOR	2.2M 5% 1/6W	
	R 381	QRD161J-473	CARBON RESISTOR	47K 5% 1/6W	
	R 382	QRD161J-220	CARBON RESISTOR	22 5% 1/6W	
	R 383	QRD161J-104	CARBON RESISTOR	100K 5% 1/6W	
	R 917	QRD161J-101	CARBON RESISTOR	100 5% 1/6W	
	R 918	QRD161J-104	CARBON RESISTOR	100K 5% 1/6W	
	R 919	QRD161J-390	CARBON RESISTOR	39 5% 1/6W	
	R 920	QRD161J-102	CARBON RESISTOR	1.0K 5% 1/6W	
	R 921	QRD161J-392	CARBON RESISTOR	3.9K 5% 1/6W	
	R 922	QRD161J-103	CARBON RESISTOR	10K 5% 1/6W	
	R 923	QRD161J-151	CARBON RESISTOR	150 5% 1/6W	
	R 924	QRZ0077-220X	F.RESISTOR	22 1/0W	
	R 925	QRD161J-473	CARBON RESISTOR	47K 5% 1/6W	
	R 926	QRD161J-561	CARBON RESISTOR	560 5% 1/6W	
	R 927	QRD161J-223	CARBON RESISTOR	22K 5% 1/6W	
	R 928	QRD167J-682	CARBON RESISTOR	6.8K 5% 1/6W	
	R 929	QRD167J-332	CARBON RESISTOR	3.3K 5% 1/6W	
	R 930	QRD167J-682	CARBON RESISTOR	6.8K 5% 1/6W	
	R 979	QRD161J-471	CARBON RESISTOR	470 5% 1/6W	
	R 980	QRD161J-104	CARBON RESISTOR	100K 5% 1/6W	
	T 1	VQT7A21-111	IFT		
	TU 1	VAF3S01-001	FRONT END		VX
	TU 1	VAF2S13-001	FRONT END		B,E,EN,G
	X 1	VCX5044-001	CRYSTAL		

■ Main Amplifier Board (A/C/J/U/UB/UP/US/UT Version)

BLOCK NO. 10

⚠	REF.	PARTS NO.	PARTS NAME	REMARKS	SUFFIX
	BP 1	VBP4M3B-005	B.PASS FILTER		
	C 1	QCS11HJ-200	C.CAPACITOR	20PF 5% 50V	
	C 2	QCBB1HK-102Y	C.CAPACITOR	1000PF 10% 50V	
	C 3	QCSB1HK-8R2Y	C.CAPACITOR	8.2PF 10% 50V	
	C 4	QCS11HJ-100	C.CAPACITOR	10PF 5% 50V	
	C 5	QCSB1HK-4R7Y	C.CAPACITOR	4.7PF 10% 50V	
	C 6	QCVB1CN-103Y	C.CAPACITOR	.010MF 30% 16V	
	C 7	QCS11HJ-200	C.CAPACITOR	20PF 5% 50V	
	C 8	QCVB1CN-103Y	C.CAPACITOR	.010MF 30% 16V	
	C 9	QCS11HJ-100	C.CAPACITOR	10PF 5% 50V	
	C 10	QCSB1HK-2R2Y	C.CAPACITOR	2.2PF 10% 50V	
	C 13	QFV41HJ-104ZM	FILM CAPACITOR	.10MF 5% 50V	
	C 14	QCBB1HK-102Y	C.CAPACITOR	1000PF 10% 50V	
	C 15	QET41CM-476	E CAPACITOR	47MF 20% 16V	
	C 16	QCVB1CN-103Y	C.CAPACITOR	.010MF 30% 16V	
	C 18	QCVB1CN-103Y	C.CAPACITOR	.010MF 30% 16V	
	C 19	QCBB1HK-151Y	C.CAPACITOR ZZZ	150PF 10% 50V	
	C 20	QCBB1HK-102Y	C.CAPACITOR	1000PF 10% 50V	
	C 21	QCC11EM-473V	C.CAPACITOR	.047MF 20% 25V	
	C 23	QCT30UJ-100Y	C.CAPACITOR	10PF 5% 50V	
	C 27	QCBB1HK-102Y	C.CAPACITOR	1000PF 10% 50V	
	C 29	QCBB1HK-151Y	C.CAPACITOR	150PF 10% 50V	
	C 30	QCVB1CN-103Y	C.CAPACITOR	.010MF 30% 16V	
	C 32	QCBB1HK-102Y	C.CAPACITOR	1000PF 10% 50V	
	C 33	QEK61AM-107Z	E.CAPACITOR	100MF 20% 10V	
	C 34	QCS11HJ-150	C.CAPACITOR	15PF 5% 50V	
	C 35	QCVB1CN-103Y	C.CAPACITOR	.010MF 30% 16V	
	C 36	QEK41CM-106	E.CAPACITOR	10MF 20% 16V	
	C 37	QCVB1CN-103Y	C.CAPACITOR	.010MF 30% 16V	
	C 38	QCC11EM-473V	C.CAPACITOR	.047MF 20% 25V	
	C 39	QCC11EM-473V	C.CAPACITOR	.047MF 20% 25V	
	C 40	QCVB1CN-103Y	C.CAPACITOR	.010MF 30% 16V	
	C 41	QEK41HM-104	E.CAPACITOR	.10MF 20% 50V	
	C 42	QEK41HM-474	E.CAPACITOR	.47MF 20% 50V	
	C 43	QEK61HM-335ZN	E.CAPACITOR	3.3MF 20% 50V	
	C 44	QCS11HJ-680	C.CAPACITOR	68PF 5% 50V	
	C 45	QEK41CM-106	E.CAPACITOR	10MF 20% 16V	
	C 46	QCC31EM-333ZV	C.CAPACITOR	.033MF 20% 25V	
	C 47	QCVB1CM-103Y	C.CAPACITOR	.010MF 20% 16V	
	C 49	QCC31EM-393ZV	C.CAPACITOR	.039MF 20% 25V	U,UB,UP,US,UT
	C 49	QCC31EM-273ZV	C.CAPACITOR	.027MF 20% 25V	A
	C 49	QCC31EM-393ZV	C.CAPACITOR	.039MF 20% 25V	C,J
	C 50	QCC31EM-273ZV	C.CAPACITOR	.027MF 20% 25V	A
	C 50	QCC31EM-393ZV	C.CAPACITOR	.039MF 20% 25V	C,J
	C 50	QCC31EM-393ZV	C.CAPACITOR	.039MF 20% 25V	U,UB,UP,US,UT
	C 51	QEK41HM-105	E.CAPACITOR	1.0MF 20% 50V	
	C 52	QEK41HM-105	E.CAPACITOR	1.0MF 20% 50V	
	C 54	QCBB1HK-102Y	C.CAPACITOR	1000PF 10% 50V	
	C 56	QCBB1HK-151Y	C.CAPACITOR	150PF 10% 50V	
	C 60	QEK61AM-107Z	E.CAPACITOR	100MF 20% 10V	
	C 61	QCS11HJ-120	C.CAPACITOR	12PF 5% 50V	
	C 62	QCS11HJ-120	C.CAPACITOR	12PF 5% 50V	
	C 63	QCBB1HK-151Y	C.CAPACITOR	150PF 10% 50V	
	C 65	QCBB1HK-102Y	C.CAPACITOR	1000PF 10% 50V	
	C 66	QCBB1HK-151Y	C.CAPACITOR	150PF 10% 50V	

BLOCK NO. 10

⚠	REF.	PARTS NO.	PARTS NAME	REMARKS	SUFFIX
	C 69	QFV41HJ-105	TF.CAPACITOR	1.0MF 5% 50V	
	C 70	QCXB1CM-392Y	C.CAPACITOR	3900PF 20% 16V	
	C 71	QET41CM-476	E CAPACITOR	47MF 20% 16V	
	C 99	QCC11EM-473V	C.CAPACITOR	.047MF 20% 25V	
	C 101	QCS11HJ-330	C.CAPACITOR	33PF 5% 50V	
	C 102	QCS11HJ-100	C.CAPACITOR	10PF 5% 50V	
	C 103	QFV41HJ-224	FILM CAPACITOR	.22MF 5% 50V	
	C 104	EETB1CM-226E	E.CAPACITOR		
	C 106	QETN1HM-335Z	E CAPACITOR	3.3MF 20% 50V	
	C 108	QTE1V06-106Z	E.CAPACITOR		
	C 110	QFV71HJ-124ZM	FILM CAPACITOR	.12MF 5% 50V	
	C 111	QFV71HJ-124ZM	FILM CAPACITOR	.12MF 5% 50V	
	C 112	QET41AM-107	E CAPACITOR	100MF 20% 10V	
	C 113	QTE1V06-106Z	E.CAPACITOR		
	C 116	QETC1HM-106ZN	E.CAPACITOR	10MF 20% 50V	
	C 122	QETN1HM-335Z	E CAPACITOR	3.3MF 20% 50V	
	C 130	QCS11HJ-330	C.CAPACITOR	33PF 5% 50V	
	C 201	QCS11HJ-330	C.CAPACITOR	33PF 5% 50V	
	C 202	QCS11HJ-100	C.CAPACITOR	10PF 5% 50V	
	C 203	QTE1H06-224Z	E CAPACITOR		
	C 204	EETB1CM-226E	E.CAPACITOR		
	C 206	QETN1HM-335Z	E CAPACITOR	3.3MF 20% 50V	
	C 208	QTE1V06-106Z	E.CAPACITOR		
	C 210	QFV71HJ-124ZM	FILM CAPACITOR	.12MF 5% 50V	
	C 211	QFV71HJ-124ZM	FILM CAPACITOR	.12MF 5% 50V	
	C 212	QET41AM-107	E CAPACITOR	100MF 20% 10V	
	C 213	QTE1V06-106Z	E.CAPACITOR		
	C 216	QETC1HM-106ZN	E.CAPACITOR	10MF 20% 50V	
	C 222	QETN1HM-335Z	E CAPACITOR	3.3MF 20% 50V	
	C 230	QCS31HJ-330Z	C.CAPACITOR	82PF 5% 50V	
	C 301	QCBB1HK-102Y	C.CAPACITOR	1000PF 10% 50V	
	C 303	QETC1HM-225ZN	E.CAPACITOR	2.2MF 20% 50V	A,C,J
	C 305	QFLC1HJ-223ZM	M CAPACITOR	.022MF 5% 50V	
	C 306	EETB1HM-475E	E.CAPACITOR		
	C 307	EETB1HM-475E	E.CAPACITOR		
	C 308	EETB1CM-226E	E.CAPACITOR		
	C 309	QCS11HJ-150	C.CAPACITOR	15PF 5% 50V	
	C 310	QCBB1HK-471Y	C.CAPACITOR	470PF 10% 50V	
	C 311	QCS11HJ-150	C.CAPACITOR	15PF 5% 50V	
	C 312	QCBB1HK-151Y	C.CAPACITOR	150PF 10% 50V	
	C 313	QCBB1HK-471Y	C.CAPACITOR	470PF 10% 50V	
	C 314	QETC1HM-224Z	E.CAPACITOR	.22MF 20% 50V	
	C 315	QFLC1HJ-103ZM	M CAPACITOR	.010MF 5% 50V	
	C 316	QFLC1HJ-393ZM	M CAPACITOR	.039MF 5% 50V	
	C 317	QFLC1HJ-473ZM	M CAPACITOR	.047MF 5% 50V	
	C 318	QFLC1HJ-103ZM	M CAPACITOR	.010MF 5% 50V	
	C 319	QFLC1HJ-393ZM	M CAPACITOR	.039MF 5% 50V	
	C 320	QFLC1HJ-473ZM	M CAPACITOR	.047MF 5% 50V	
	C 321	EETB1EM-106E	E.CAPACITOR		
	C 322	EETB1AM-476E	E.CAPACITOR		
	C 323	QET41EM-106	E CAPACITOR	10MF 20% 25V	
	C 324	EETC1CM-106ZJC	E.CAPACITOR		
	C 325	EETB1HM-105E	E.CAPACITOR		
	C 327	QFV71HJ-184ZM	FILM CAPACITOR	.18MF 5% 50V	
	C 329	QETB1HM-474N	E.CAPACITOR	.47MF 20% 50V	

BLOCK NO. 10

⚠	REF.	PARTS NO.	PARTS NAME	REMARKS	SUFFIX
	C 332	QFLC1HJ-103ZM	M CAPACITOR	.010MF 5% 50V	
	C 334	QFLC1HJ-223ZM	M CAPACITOR	.022MF 5% 50V	
	C 335	QET41AM-107	E CAPACITOR	100MF 20% 10V	
	C 336	QET41CM-106	E CAPACITOR	10MF 20% 16V	U,UB,UP,US,JT
	C 338	QET41CM-106	E CAPACITOR	10MF 20% 16V	U,UB,UP,US,JT
	C 339	QET41HM-475	E CAPACITOR	4.7MF 20% 50V	U,UB,UP,US,JT
	C 340	QET41CM-106	E CAPACITOR	10MF 20% 16V	U,UB,UP,US,JT
	C 342	QFV71HJ-334ZM	FILM CAPACITOR	.33MF 5% 50V	U,UB,UP,US,JT
	C 343	QFLC1HJ-683ZM	M CAPACITOR	.068MF 5% 50V	U,UB,UP,US,JT
	C 344	QET41CM-106	E CAPACITOR	10MF 20% 16V	U,UB,UP,US,JT
	C 345	QFLC1HJ-682ZM	M CAPACITOR	6800PF 5% 50V	U,UB,UP,US,JT
	C 347	QET41CM-226	E CAPACITOR	22MF 20% 16V	U,UB,UP,US,JT
	C 350	QET41HM-105	E CAPACITOR	1.0MF 20% 50V	U,UB,UP,US,JT
	C 351	EETB1CM-476	E.CAPACITOR		
	C 352	QET41EM-106	E CAPACITOR	10MF 20% 25V	
	C 353	QCBB1HK-471Y	C.CAPACITOR	470PF 10% 50V	
	C 354	QCBB1HK-471Y	C.CAPACITOR	470PF 10% 50V	
	C 357	QET41CM-226	E.CAPACITOR	22MF 20% 16V	U,UB,UP,US,JT
	C 361	EETB1HM-105E	E.CAPACITOR		U,UB,UP,US,JT
	C 362	QCBB1HK-151Y	C.CAPACITOR	150PF 10% 50V	
	C 363	QET41AM-108	E CAPACITOR	1000MF 20% 10V	
	C 364	QET41AM-108	E CAPACITOR	1000MF 20% 10V	
	C 366	QCBB1HK-151Y	C.CAPACITOR	150PF 10% 50V	
	C 367	QFLC1HJ-104ZM	M CAPACITOR	.10MF 5% 50V	U,UB,UP,US,JT
	C 368	QFLC1HJ-104ZM	M CAPACITOR	.10MF 5% 50V	U,UB,UP,US,JT
	C 380	QCS11HJ-330	C.CAPACITOR	33PF 5% 50V	
	C 381	QCXB1CM-182Y	C.CAPACITOR	1800PF 20% 16V	
	C 382	QFLC1HJ-153ZM	M CAPACITOR	.015MF 5% 50V	
	C 383	QCBB1HK-681Y	C.CAPACITOR	680PF 10% 50V	
	C 384	EETB1HM-105E	E.CAPACITOR		
	C 385	QET41HM-476	E.CAPACITOR	47MF 20% 50V	
	C 908	EETB1HM-475E	E.CAPACITOR		
	C 909	EETB1CM-226E	E.CAPACITOR		
	C 910	EETC1CM-106ZJC	E.CAPACITOR		
	C 911	QFLC1HJ-103ZM	M CAPACITOR	.010MF 5% 50V	
	C 912	QET41AM-107	E CAPACITOR	100MF 20% 10V	
	C 920	QFLC1HJ-103ZM	M CAPACITOR	.010MF 5% 50V	
	C 921	QET41AM-107	E CAPACITOR	100MF 20% 10V	
	C 968	QCVB1CM-103Y	C.CAPACITOR	.010MF 20% 16V	
	CF 1	VCF2L3B-108Z	C FILTER		
	CF 2	VCF2L3B-108Z	C FILTER		
	CF 3	VCF1Z2Z-115Z	CERAMIC FILTER		
	CF 4	CMU2-456A05	CERA LOCK		
	CN302	VMC0332-010V	CONNECTOR		
	CN303	VMC0163-029	CONNECTOR		
	CN304	VMC0332-007V	CONNECTOR		
	CN305	VMC0332-011V	CONNECTOR		
	CN306	VMC0332-010V	CONNECTOR		
	CN307	EMV5125-008	CONNECTOR		
	CN308	EMV5125-013	CONNECTOR		
	CN310	EMV7145-005Z	SOCKET		U,UB,UP,US,JT
	CN313	EMV7145-003Z	SOCKET		
	D 1	SVC203SPA-AB-AL	VARI CAP		
	D 2	SVC203SPA-AB-AL	VARI CAP		
	D 3	1SS133	SI DIODE		

BLOCK NO. 10

⚠	REF.	PARTS NO.	PARTS NAME	REMARKS	SUFFIX
	D 4	1SS133	SI DIODE		
	D 6	1SS133	SI DIODE		
	D 7	1SS133	SI DIODE		
	D 11	1SS133	SI DIODE		
	D 12	1SS133	SI DIODE		
	D 13	1SS133	SI DIODE		
	D 300	RB721Q	DIODE		
	D 301	1SS133	SI DIODE		
	D 302	1SS133	SI DIODE		
	D 303	RB721Q	DIODE		
	D 304	1SS133	SI DIODE		
	D 305	MTZ5.1JAT-77	ZENER DIODE		
	D 306	1SS133	SI DIODE		
	D 307	1SS133	SI DIODE		
	D 308	1SS133	SI DIODE		
	D 310	1SS133	SI DIODE		
	D 311	1SS133	SI DIODE		
	D 312	1SS133	SI DIODE		
	D 313	1SS133	SI DIODE		
	D 314	1SS133	SI DIODE		
	D 315	1SR35-100	SI DIODE		
	D 318	1SS133	SI DIODE		
	D 319	1SS133	SI DIODE		
	D 322	1SS133	SI DIODE		
	D 380	1SS133	SI DIODE		
	D 381	1SS133	SI DIODE		U,UB,UP,US,UT
	D 383	1SS133	SI DIODE		U,UB,UP,US,UT
	D 904	MTZ4.3JB	ZENER DIODE		
	D 905	1SS133	SI DIODE		
	D 906	1SS133	SI DIODE		
	D 907	MTZ3.9JB	ZENER DIODE		
	D 912	RD5.6JSAB1	ZENER DIODE		
	D 913	1SS133	SI DIODE		
	D 915	1SS133	SI DIODE		
	D 928	MTZ2.4JB	ZENER DIODE		
	EP001	E409182-001SM	GRAND TERMINAL		
	IC 1	TA2057N	IC		
	IC 2	LC72136N	IC		
	IC 4	TA7358P	IC		
	IC301	NJM4580L	IC		
	IC302	BH3854AS	IC		
	IC303	NJM4580L	IC		
	IC305	BA3837	IC(VOCALFADER)		U,UB,UP,US,UT
	J 1	FMMB10YV-401K	ANT TERMINAL		
	JA301	EMN00TV-222AJ2	PIN JACK		
	L 1	VQF1B20-019	OSC COIL		
	L 2	VQC1505-002T	RF COIL		
	L 3	VQZ0098-202	COIL BLOCK		
	L 4	VQP0018-221	INDUCTOR		
	L 306	VQP0028-100Z	INDUCTOR		
	PP301	VMZ0015-005	POST PIN		
	PP302	VMZ0015-005	POST PIN		
	Q 1	2SC1923	TRANSISTOR		
	Q 4	DTA114YS	TRANSITOR		
	Q 301	2SD2144S(VW)	TRANSISTOR		

BLOCK NO. 10

⚠	REF.	PARTS NO.	PARTS NAME	REMARKS	SUFFIX
	Q 302	2SD2144S(VW)	TRANSISTOR		
	Q 303	DTA114YS	TRANSISTOR		
	Q 304	2SK246(GR,BL)	FET		
	Q 305	2SK246(GR,BL)	FET		
	Q 306	DTC144TSTP	TRANSISTOR		
	Q 307	2SD2144S(VW)	TRANSISTOR		
	Q 308	2SD2144S(VW)	TRANSISTOR		
	Q 309	2SC2785	TRANSISTOR		
	Q 310	2SC2785	TRANSISTOR		
	Q 311	DTA114ES	TRANSISTOR		
	Q 312	2SC2785	TRANSISTOR		
	Q 314	DTA144ES	D.TRANSISTOR		
	Q 315	2SD2144S(VW)	TRANSISTOR		U,UB,UP,US,UT
	Q 316	2SD2144S(VW)	TRANSISTOR		U,UB,UP,US,UT
	Q 317	2SC2785	TRANSISTOR		U,UB,UP,US,UT
	Q 320	DTC144TSTP	TRANSISTOR		
	Q 380	2SC2785	TRANSISTOR		
	Q 381	2SC2785	TRANSISTOR		
	Q 907	2SA1175	TRANSISTOR		
	Q 908	2SC2785	TRANSISTOR		
	Q 909	2SB1375	TRANSISTOR		
	Q 910	2SC2785	TRANSISTOR		
	Q 913	2SB1375	TRANSISTOR		
	Q 914	2SC2785	TRANSISTOR		
	Q 915	2SC2785	TRANSISTOR		
	Q 916	2SC2785	TRANSISTOR		
	R 1	QRD161J-104	CARBON RESISTOR	100K 5% 1/6W	
	R 2	QRD161J-473	CARBON RESISTOR	47K 5% 1/6W	
	R 3	QRD167J-4R7	CARBON RESISTOR	4.7 5% 1/6W	
	R 7	QRD161J-104	CARBON RESISTOR	100K 5% 1/6W	
	R 8	QRD161J-821	CARBON RESISTOR	820 5% 1/6W	
	R 9	QRD161J-102	CARBON RESISTOR	1.0K 5% 1/6W	
	R 10	QRD161J-101	CARBON RESISTOR	100 5% 1/6W	
	R 11	QRD161J-104	CARBON RESISTOR	100K 5% 1/6W	
	R 12	QRD161J-560	CARBON RESISTOR	56 5% 1/6W	A,UP
	R 17	QRD161J-102	CARBON RESISTOR	1.0K 5% 1/6W	
	R 18	QRD161J-102	CARBON RESISTOR	1.0K 5% 1/6W	
	R 20	QRD161J-331	CARBON RESISTOE	330 5% 1/6W	
	R 21	QRD161J-474	CARBON RESISTOR	470K 5% 1/6W	
	R 22	QRD161J-331	CARBON RESISTOE	330 5% 1/6W	
	R 23	QRD161J-560	CARBON RESISTOR	56 5% 1/6W	
	R 24	QRD161J-271	CARBON RESISTOR	270 5% 1/6W	
	R 25	QRD161J-273	CARBON RESISTOR	27K 5% 1/6W	
	R 26	QRD161J-273	CARBON RESISTOR	27K 5% 1/6W	
	R 27	QRD161J-223	CARBON RESISTOR	22K 5% 1/6W	
	R 30	QRD161J-103	CARBON RESISTOR	10K 5% 1/6W	
	R 31	QRD161J-103	CARBON RESISTOR	10K 5% 1/6W	
	R 32	QRD161J-560	CARBON RESISTOR	56 5% 1/6W	
	R 33	QRD161J-102	CARBON RESISTOR	1.0K 5% 1/6W	
	R 34	QRD161J-222	CARBON RESISTOR	2.2K 5% 1/6W	
	R 35	QRD161J-222	CARBON RESISTOR	2.2K 5% 1/6W	
	R 36	QRD161J-103	CARBON RESISTOR	10K 5% 1/6W	
	R 37	QRD167J-562	CARBON RESISTOR	5.6K 5% 1/6W	
	R 38	QRD161J-392	CARBON RESISTOR	3.9K 5% 1/6W	
	R 39	QRD161J-392	CARBON RESISTOR	3.9K 5% 1/6W	

BLOCK NO. 10

⚠	REF.	PARTS NO.	PARTS NAME	REMARKS	SUFFIX
	R 42	QRD161J-102	CARBON RESISTOR	1.0K 5% 1/6W	
	R 43	QRD161J-102	CARBON RESISTOR	1.0K 5% 1/6W	
	R 44	QRD161J-102	CARBON RESISTOR	1.0K 5% 1/6W	
	R 45	QRD161J-102	CARBON RESISTOR	1.0K 5% 1/6W	
	R 46	QRD161J-104	CARBON RESISTOR	100K 5% 1/6W	
	R 47	QRD161J-102	CARBON RESISTOR	1.0K 5% 1/6W	
	R 50	QRD161J-102	CARBON RESISTOR	1.0K 5% 1/6W	
	R 52	QRD161J-472	CARBON RESISTOR	4.7K 5% 1/6W	
	R 54	QRD161J-472	CARBON RESISTOR	4.7K 5% 1/6W	
	R 55	QRD161J-182	CARBON RESISTOR	1.8K 5% 1/6W	
	R 56	QRD167J-332	CARBON RESISTOR	3.3K 5% 1/6W	
	R 57	QRD161J-102	CARBON RESISTOR	1.0K 5% 1/6W	
	R 58	QRD167J-562	CARBON RESISTOR	5.6K 5% 1/6W	
	R 59	QRD167J-562	CARBON RESISTOR	5.6K 5% 1/6W	
	R 64	QRD161J-473	CARBON RESISTOR	47K 5% 1/6W	
	R 66	QRD161J-104	CARBON RESISTOR	100K 5% 1/6W	
	R 67	QRD161J-473	CARBON RESISTOR	47K 5% 1/6W	
	R 69	QRD161J-103	CARBON RESISTOR	10K 5% 1/6W	
	R 93	QRZ9044-335	COMP.RESISTOR	3.3M 1/0W	C,J
	R 94	QRZ9044-335	COMP.RESISTOR	3.3M 1/0W	C,J
	R 101	QRD161J-114	CARBON RESISTOR	110K 5% 1/6W	
	R 102	QRD161J-102	CARBON RESISTOR	1.0K 5% 1/6W	
	R 103	QRD161J-223	CARBON RESISTOR	22K 5% 1/6W	U,UB,UP,US,UT
	R 103	QRD161J-101	CARBON RESISTOR	100 5% 1/6W	A,C,J
	R 104	QRD161J-393	CARBON RESISTOR	39K 5% 1/6W	
	R 107	QRD161J-104	CARBON RESISTOR	100K 5% 1/6W	
	R 108	QRD161J-362	CARBON RESISTOR	3.6K 5% 1/6W	
	R 109	QRD161J-303Y	CARBON RESISTOR	30K 5% 1/6W	
	R 110	QRD161J-184	CARBON RESISTOR	180K 5% 1/6W	
	R 111	QRD161J-563	CARBON RESISTOR	56K 5% 1/6W	
	R 112	QRD161J-102	CARBON RESISTOR	1.0K 5% 1/6W	
	R 113	QRD161J-104	CARBON RESISTOR	100K 5% 1/6W	
	R 114	QRD161J-105	CARBON RESISTOR	1.0M 5% 1/6W	
	R 116	QRD161J-124	CARBON RESISTOR	100K 5% 1/6W	
	R 117	QRD161J-222	CARBON RESISTOR	2.2K 5% 1/6W	
	R 118	QRD161J-222	CARBON RESISTOR	2.2K 5% 1/6W	
	R 119	QRD161J-822	CARBON RESISTOR	8.2K 5% 1/6W	
	R 120	QRD161J-822	CARBON RESISTOR	8.2K 5% 1/6W	
	R 121	QRD161J-102	CARBON RESISTOR	1.0K 5% 1/6W	
	R 122	QRD161J-472	CARBON RESISTOR	4.7K 5% 1/6W	
	R 123	QRD161J-474	CARBON RESISTOR	470K 5% 1/6W	
	R 124	QRD161J-472	CARBON RESISTOR	4.7K 5% 1/6W	
	R 125	QRD161J-103	CARBON RESISTOR	10K 5% 1/6W	
	R 130	QRD161J-184	CARBON RESISTOR	180K 5% 1/6W	
	R 131	QRD161J-472	CARBON RESISTOR	4.7K 5% 1/6W	U,UB,UP,US,UT
	R 201	QRD161J-114	CARBON RESISTOR	110K 5% 1/6W	
	R 202	QRD161J-102	CARBON RESISTOR	1.0K 5% 1/6W	
	R 203	QRD161J-101	CARBON RESISTOR	100 5% 1/6W	A,C,J
	R 203	QRD161J-223	CARBON RESISTOR	22K 5% 1/6W	U,UB,UP,US,UT
	R 204	QRD161J-333	CARBON RESISTOR	33K 5% 1/6W	
	R 207	QRD161J-104	CARBON RESISTOR	100K 5% 1/6W	
	R 208	QRD161J-362	CARBON RESISTOR	3.6K 5% 1/6W	
	R 209	QRD161J-303Y	CARBON RESISTOR	30K 5% 1/6W	
	R 210	QRD161J-184	CARBON RESISTOR	180K 5% 1/6W	
	R 211	QRD161J-563	CARBON RESISTOR	56K 5% 1/6W	

BLOCK NO. 10

⚠	REF.	PARTS NO.	PARTS NAME	REMARKS	SUFFIX
	R 212	QRD161J-102	CARBON RESISTOR	1.0K 5% 1/6W	
	R 213	QRD161J-104	CARBON RESISTOR	100K 5% 1/6W	
	R 214	QRD161J-105	CARBON RESISTOR	1.0M 5% 1/6W	
	R 216	QRD161J-124	CARBON RESISTOR	120K 5% 1/6W	
	R 217	QRD161J-222	CARBON RESISTOR	2.2K 5% 1/6W	
	R 218	QRD161J-222	CARBON RESISTOR	2.2K 5% 1/6W	
	R 219	QRD161J-822	CARBON RESISTOR	8.2K 5% 1/6W	
	R 220	QRD161J-822	CARBON RESISTOR	8.2K 5% 1/6W	
	R 221	QRD161J-102	CARBON RESISTOR	1.0K 5% 1/6W	
	R 222	QRD161J-472	CARBON RESISTOR	4.7K 5% 1/6W	
	R 223	QRD161J-103	CARBON RESISTOR	10K 5% 1/6W	
	R 224	QRD161J-472	CARBON RESISTOR	4.7K 5% 1/6W	
	R 225	QRD161J-103	CARBON RESISTOR	10K 5% 1/6W	
	R 230	QRD161J-184	CARBON RESISTOR	180K 5% 1/6W	
	R 231	QRD161J-472	CARBON RESISTOR	4.7K 5% 1/6W	U,UB,UP,US,UT
	R 300	QRD161J-334	CARBON RESISTOR	330K 5% 1/6W	
	R 301	QRD161J-473	CARBON RESISTOR	47K 5% 1/6W	
	R 302	QRD161J-184	CARBON RESISTOR	180K 5% 1/6W	
	R 303	QRD161J-224	CARBON RESISTOR	220K 5% 1/6W	
	R 304	QRD161J-124	CARBON RESISTOR	120K 5% 1/6W	
	R 305	QRD161J-102	CARBON RESISTOR	1.0K 5% 1/6W	
	R 306	QRD161J-102	CARBON RESISTOR	1.0K 5% 1/6W	
	R 307	QRD161J-222	CARBON RESISTOR	2.2K 5% 1/6W	
	R 308	QRD161J-152	CARBON RESISTOR	1.5K 5% 1/6W	
	R 309	QRD161J-101	CARBON RESISTOR	100 5% 1/6W	
	R 310	QRD161J-223	CARBON RESISTOR	22K 5% 1/6W	
	R 311	QRD161J-124	CARBON RESISTOR	120K 5% 1/6W	
	R 313	QRD161J-302	CARBON RESISTOR	3.0K 5% 1/6W	
	R 315	QRD161J-222	CARBON RESISTOR	2.2K 5% 1/6W	
	R 316	QRD161J-474	CARBON RESISTOR	470K 5% 1/6W	
	R 318	QRD161J-104	CARBON RESISTOR	100K 5% 1/6W	
	R 320	QRD161J-104	CARBON RESISTOR	100K 5% 1/6W	
	R 321	QRD161J-102	CARBON RESISTOR	1.0K 5% 1/6W	U,UB,UP,US,UT
	R 323	QRD161J-221	CARBON RESISTOR	220 5% 1/6W	U,UB,UP,US,UT
	R 327	QRD161J-223	CARBON RESISTOR	22K 5% 1/6W	
	R 328	QRD161J-223	CARBON RESISTOR	22K 5% 1/6W	
	R 330	QRD167J-562	CARBON RESISTOR	2.4K 5% 1/6W	U,UB,UP,US,UT
	R 331	QRD167J-562	CARBON RESISTOR	2.4K 5% 1/6W	U,UB,UP,US,UT
	R 340	QRD161J-513	CARBON RESISTOR	5.6K 5% 1/6W	U,UB,UP,US,UT
	R 347	QRD161J-153	CARBON RESISTOR	15K 5% 1/6W	
	R 350	QRD161J-223	CARBON RESISTOR	22K 5% 1/6W	
	R 353	QRD161J-823	CARBON RESISTOR	82K 5% 1/6W	
	R 354	QRD161J-823	CARBON RESISTOR	82K 5% 1/6W	
	R 355	QRD161J-105	CARBON RESISTOR	1.0M 5% 1/6W	
	R 356	QRD161J-105	CARBON RESISTOR	1.0M 5% 1/6W	
	R 357	QRD161J-102	CARBON RESISTOR	1.0K 5% 1/6W	
	R 358	QRD161J-102	CARBON RESISTOR	1.0K 5% 1/6W	
	R 361	QRD167J-562	CARBON RESISTOR	5.6K 5% 1/6W	
	R 362	QRD161J-103	CARBON RESISTOR	10K 5% 1/6W	U,UB,UP,US,UT
	R 363	QRD161J-473	CARBON RESISTOR	47K 5% 1/6W	U,UB,UP,US,UT
	R 364	QRD161J-563	CARBON RESISTOR	56K 5% 1/6W	U,UB,UP,US,UT
	R 365	QRD161J-223	CARBON RESISTOR	22K 5% 1/6W	U,UB,UP,US,UT
	R 380	QRD161J-225	CARBON RESISTOR	2.2M 5% 1/6W	
	R 381	QRD161J-473	CARBON RESISTOR	47K 5% 1/6W	
	R 382	QRD161J-220	CARBON RESISTOR	22 5% 1/6W	

BLOCK NO. 10

⚠	REF.	PARTS NO.	PARTS NAME	REMARKS	SUFFIX
	R 383	QRD161J-104	CARBON RESISTOR	100K 5% 1/6W	
	R 399	QRD161J-101	CARBON RESISTOR	100 5% 1/6W	U,UB,UP,US,UT
	R 400	QRD167J-682	CARBON RESISTOR	2.7K 5% 1/6W	U,UB,UP,US,UT
	R 401	QRD161J-473	CARBON RESISTOR	47K 5% 1/6W	U,UB,UP,US,UT
	R 402	QRD161J-103	CARBON RESISTOR	10K 5% 1/6W	U,UB,UP,US,UT
	R 403	QRD161J-561	CARBON RESISTOR	560 5% 1/6W	U,UB,UP,US,UT
	R 917	QRD161J-101	CARBON RESISTOR	100 5% 1/6W	
	R 918	QRD161J-104	CARBON RESISTOR	100K 5% 1/6W	
	R 919	QRD161J-390	CARBON RESISTOR	39 5% 1/6W	
	R 920	QRD161J-102	CARBON RESISTOR	1.0K 5% 1/6W	
	R 921	QRD161J-392	CARBON RESISTOR	3.9K 5% 1/6W	
	R 922	QRD161J-103	CARBON RESISTOR	10K 5% 1/6W	
	R 923	QRD161J-151	CARBON RESISTOR	150 5% 1/6W	
	R 924	QRZ0077-220X	F.RESISTOR	22 1/6W	A
	R 924	QRZ0077-220X	F.RESISTOR	22 1/0W	U,UB,UP,US,UT
	R 925	QRD161J-473	CARBON RESISTOR	47K 5% 1/6W	
	R 926	QRD161J-561	CARBON RESISTOR	560 5% 1/6W	
	R 927	QRD161J-223	CARBON RESISTOR	22K 5% 1/6W	
	R 928	QRD167J-682	CARBON RESISTOR	6.8K 5% 1/6W	
	R 929	QRD167J-332	CARBON RESISTOR	3.3K 5% 1/6W	
	R 930	QRD167J-682	CARBON RESISTOR	6.8K 5% 1/6W	
	R 979	QRD161J-471	CARBON RESISTOR	470 5% 1/6W	
	R 980	QRD161J-104	CARBON RESISTOR	100K 5% 1/6W	
	T 1	VQT7F12-110	IFT		
	T 2	VQT7A21-111	IFT		
	X 1	VCX5044-001	CRYSTAL		

■ Power Supply & Power Amplifier Board

BLOCK NO. 02

⚠	REF.	PARTS NO.	PARTS NAME	REMARKS	SUFFIX
	C 900	QETM1HM-228	E CAPACITOR	2200MF 20% 50V	
	C 901	QETM1HM-228	E CAPACITOR	2200MF 20% 50V	
	C 902	QETM1EM-228	E CAPASITOR	2200MF 20% 25V	
	C 904	QCBB1HK-221Y	C.CAPACITOR	220PF 10% 50V	
	C 905	QET41CM-106	E CAPACITOR	10MF 20% 16V	
	C 906	QETN1HM-225Z	E CAPACITOR	2.2MF 20% 50V	
	C 907	QET41CM-226	E CAPACITOR	22MF 20% 16V	
	C 913	QFLC1HJ-683ZM	M CAPACITOR	.068MF 5% 50V	
	C 914	QFLC1HJ-683ZM	M CAPACITOR	.068MF 5% 50V	
	C 915	QFLC1HJ-683ZM	M CAPACITOR	.068MF 5% 50V	
	C 916	QFLC1HJ-683ZM	M CAPACITOR	.068MF 5% 50V	
	C 917	QETN1JM-476Z	E CAPACITOR	47MF 20% 63V	
	C 918	QET41HM-226	E CAPACITOR	22MF 20% 50V	
	C 919	QETB1JM-107	E CAPACITOR	100MF 20% 63V	
	C 922	QET41HM-226	E CAPACITOR	22MF 20% 50V	
	C 923	QCVB1CN-103Y	C.CAPACITOR	.010MF 30% 16V	
	C 924	QET41HM-475	E CAPACITOR	4.7MF 20% 50V	
	C 925	QFLC1HJ-104ZM	M CAPACITOR	.10MF 5% 50V	
	C 926	QFLC1HJ-104ZM	M CAPACITOR	.10MF 5% 50V	
	C 927	QFLC1HJ-104ZM	M CAPACITOR	.10MF 5% 50V	
	C 928	QFLC1HJ-104ZM	M CAPACITOR	.10MF 5% 50V	
	C 929	QCS11HJ-100	C.CAPACITOR	10PF 5% 50V	
	C 930	QCS11HJ-100	C.CAPACITOR	10PF 5% 50V	
	C 931	QET41HM-476	E CAPACITOR	47MF 20% 50V	
	C 932	QET41HM-476	E CAPACITOR	47MF 20% 50V	
	C 933	QCBB1HK-101Y	C.CAPACITOR	100PF 10% 50V	
	C 934	QCBB1HK-101Y	C.CAPACITOR	100PF 10% 50V	
	C 935	QTE1V06-106Z	E.CAPACITOR		
	C 936	QTE1V06-106Z	E.CAPACITOR		
	C 937	QETN1HM-106Z	E CAPACITOR	10MF 20% 50V	
	C 938	QETN1HM-106Z	E CAPACITOR	10MF 20% 50V	
	C 939	QCBB1HK-101Y	C.CAPACITOR	100PF 10% 50V	
	C 940	QCBB1HK-101Y	C.CAPACITOR	100PF 10% 50V	
	C 941	QET41HM-226	E CAPACITOR	22MF 20% 50V	
	C 942	QET41HM-226	E CAPACITOR	22MF 20% 50V	
	C 943	QET41HM-105	E CAPACITOR	1.0MF 20% 50V	
	C 944	QFLC1HJ-223ZM	M CAPACITOR	.022MF 5% 50V	
	C 945	QET41CM-476	E CAPACITOR	47MF 20% 16V	
	C 946	QET41CM-226	E CAPACITOR	22MF 20% 16V	
	C 947	QFLC1HJ-223ZM	M CAPACITOR	.022MF 5% 50V	B,E,EN,G
	C 948	QFLC1HJ-223ZM	M CAPACITOR	.022MF 5% 50V	B,E,EN,G
	C 949	QFLC1HJ-223ZM	M CAPACITOR	.022MF 5% 50V	B,E,EN,G
	C 950	QFLC1HJ-223ZM	M CAPACITOR	.022MF 5% 50V	B,E,EN,G
	C 951	QET41HM-105	E CAPACITOR	1.0MF 20% 50V	
	C 958	QCF11HP-223	C.CAPACITOR	.022MF +100:-0%	
	C 961	QETN1HM-106Z	E CAPACITOR	10MF 20% 50V	
	C 963	QFLC1HJ-153ZM	M CAPACITOR	.015MF 5% 50V	
	C 964	QFLC1HJ-153ZM	M CAPACITOR	.022MF 5% 50V	
	C 967	QFLC1HJ-104ZM	M CAPACITOR	.10MF 5% 50V	
	C 971	QCY31HK-272	C.CAPACITOR	2700PF 10% 50V	B,E,EN,G
	C 972	QCY31HK-272	C.CAPACITOR	2700PF 10% 50V	B,E,EN,G
	CN900	EMV7125-013R	CONNECTOR		
	CN901	EMV7125-008R	CONNECTOR		
	CN903	EMV7145-004Z	CONNECTOR		
	CN904	EMV7145-005Z	CONNECTOR		

BLOCK NO. 02

⚠	REF.	PARTS NO.	PARTS NAME	REMARKS	SUFFIX
	CN905	EMV7145-005Z	CONNECTOR		
	D 900	1SS133	DIODE		
	D 901	MTZ9.1JA	ZENER DIODE		
	D 902	1SR35-100	SI.DIODE		
	D 903	1SR35-100	SI.DIODE		
	D 908	1N5401TM	SI.DIODE		A,VX
	D 908	1N5401TM	SI.DIODE		B,E,EN,G
	D 908	1N5401TM	SI.DIODE		U,UB,UP,US,UT
	D 908	10E2-FD	DIODE		C,J
	D 909	10E2-FD	DIODE		C,J
	D 909	1N5401TM	SI.DIODE		A,VX
	D 909	1N5401TM	SI.DIODE		B,E,EN,G
	D 909	1N5401TM	SI.DIODE		U,UB,UP,US,UT
	D 910	1N5401TM	SI.DIODE		A,VX
	D 910	1N5401TM	SI.DIODE		B,E,EN,G
	D 910	1N5401TM	SI.DIODE		U,UB,UP,US,UT
	D 910	1N5401TM	SI.DIODE		
	D 910	10E2-FD	DIODE		C,J
	D 911	10E2-FD	DIODE		C,J
	D 911	1N5401TM	SI.DIODE		A,VX
	D 911	1N5401TM	SI.DIODE		B,E,EN,G
	D 911	1N5401TM	SI.DIODE		U,UB,UP,US,UT
	D 916	1SR139-200	DIODE		
	D 917	1SR139-200	DIODE		
	D 918	MTZ33JC	ZENER DIODE		
	D 919	MTZ6.2JAT-77	ZENER DIODE		
	D 920	MTZ24JC	ZENER DIODE		
	D 921	1SS133	DIODE		
	D 922	1SS133	DIODE		
	D 923	1SS133	DIODE		
	D 924	1SS133	DIODE		
	D 926	1SS133	DIODE		
	D 927	MZT5.1JCT-77	ZENER SIODE		
	EP901	E409182-001SM	GRAND TERMINAL		
	FT001	EMG7331-003Z	FUSE CLIP		U,UB,UP,US,UT
	FT002	EMG7331-003Z	FUSE CLIP		U,UB,UP,US,UT
	FT003	EMG7331-003Z	FUSE CLIP		
	FT004	EMG7331-003Z	FUSE CLIP		
	FT005	EMG7331-003Z	FUSE CLIP		
	FT006	EMG7331-003Z	FUSE CLIP		
	FT007	EMG7331-003Z	FUSE CLIP		
	FT008	EMG7331-003Z	FUSE CLIP		
	FW999	EWR39D-25LS	CORD		
	IC900	TDA7295	IC		
	IC901	TDA7295	IC		
	JA901	FMMJ4003-001	TERMINAL		
	L 900	EQL0011-R45J1	INDUCTOR		
	L 901	EQL0011-R45J1	INDUCTOR		
	L 942	VQZ0104-003	INDUCTOR		B,E,EN,G
	L 971	VQZ0104-003	INDUCTOR		B,E,EN,G
	Q 901	2SA1175	TRANSISTOR		
	Q 902	DTC144TSTP	TRANSISTOR		
	Q 903	DTA144TSTP	TRANSISTOR		
	Q 904	2SB1375	TRANSISTOR		
	Q 905	2SC2785	TRANSISTOR		

BLOCK NO. 02

⚠	REF.	PARTS NO.	PARTS NAME	REMARKS	SUFFIX
	Q 906	2SC2785	TRANSISTOR		
	Q 911	2SA934(Q,R)	TRANSISTOR		
	Q 912	DTA114ES	TRANSISTOR		
	Q 917	2SC945A	TRANSISTOR		
	Q 918	2SC945A	TRANSISTOR		
	Q 919	2SA933S(RS)	TRANSISTOR		
	Q 920	2SC945A	TRANSISTOR		
	Q 921	2SD2144S(VW)	TRANSISTOR		
	Q 922	2SD2144S(VW)	TRANSISTOR		
	Q 923	DTC114YSTP	TRANSISTOR		
	Q 924	DTC114YSTP	TRANSISTOR		
	R 001	QRZ9044-335	COMP.RESISTOR	3.3M 1/0W	C,J
	R 900	QRD161J-471	CARBON RESISTOR	470 5% 1/6W	
	R 901	QRD161J-102	CARBON RESISTOR	1.0K 5% 1/6W	
	R 902	QRD161J-1R0	CARBON RESISTOR	1.0 5% 1/6W	
	R 903	QRD161J-1R0	CARBON RESISTOR	1.0 5% 1/6W	
	R 904	QRD161J-1R0	CARBON RESISTOR	1.0 5% 1/6W	
	R 905	QRD167J-682	CARBON RESISTOR	6.8K 5% 1/6W	
	R 906	QRD161J-122	CARBON RESISTOR	1.2K 5% 1/6W	
	R 907	QRD161J-821	CARBON RESISTOR	820 5% 1/6W	
	R 908	QRZ0077-151X	F.RESISTOR	150 1/0W	
	R 909	QRD161J-472	CARBON RESISTOR	4.7K 5% 1/6W	
	R 910	QRD161J-471	CARBON RESISTOR	470 5% 1/6W	
	R 911	QRD161J-222	CARBON RESISTOR	2.2K 5% 1/6W	
	R 912	QRD161J-222	CARBON RESISTOR	2.2K 5% 1/6W	
	R 913	QRD161J-472	CARBON RESISTOR	4.7K 5% 1/6W	
	R 914	QRD161J-472	CARBON RESISTOR	4.7K 5% 1/6W	
	R 915	QRZ0077-100X	FUSE RESISTOR	10 1/0W	
	R 916	QRD161J-222	CARBON RESISTOR	2.2K 5% 1/6W	
	R 921	QRD161J-222	CARBON RESISTOR	2.2K 5% 1/6W	C,J
	R 922	QRD161J-222	CARBON RESISTOR	2.2K 5% 1/6W	C,J
	R 931	QRD161J-1R0	CARBON RESISTOR	1.0 5% 1/6W	
	R 933	QRD161J-1R0	CARBON RESISTOR	1.0 5% 1/6W	
	R 935	QRD161J-102	CARBON RESISTOR	1.0K 5% 1/6W	
	R 936	QRD161J-103	CARBON RESISTOR	10K 5% 1/6W	
	R 937	QRD161J-152	CARBON RESISTOR	1.5K 5% 1/6W	
	R 938	QRD161J-330	CARBON RESISTOR	33 5% 1/6W	
	R 939	QRG01DJ-471X	OMF RESISTOR	470 5% 1/1W	
	R 940	QRD14CJ-100SX	CARBON RESISTOR	10 5% 1/4W	
	R 941	QRD14CJ-100SX	CARBON RESISTOR	10 5% 1/4W	
	R 942	QRD14CJ-100SX	CARBON RESISTOR	10 5% 1/4W	
	R 943	QRD14CJ-100SX	CARBON RESISTOR	10 5% 1/4W	
	R 944	QRD161J-823	CARBON RESISTOR	82K 5% 1/6W	
	R 945	QRD161J-104	CARBON RESISTOR	100K 5% 1/6W	
	R 946	QRX014J-R22	UNF.MF.RESISTOR	5% 1/1W	
	R 947	QRX014J-R22	UNF.MF.RESISTOR	5% 1/1W	
	R 948	QRD161J-122	CARBON RESISTOR	1.2K 5% 1/6W	
	R 949	QRD161J-122	CARBON RESISTOR	1.2K 5% 1/6W	
	R 950	QRD161J-823	CARBON RESISTOR	100K 5% 1/6W	
	R 951	QRD161J-823	CARBON RESISTOR	82K 5% 1/6W	
	R 952	QRD141J-561	UNF.C.RESISTOR	560 5% 1/4W	
	R 953	QRD141J-561	UNF.C.RESISTOR	560 5% 1/4W	
	R 954	QRD161J-104	CARBON RESISTOR	100K 5% 1/6W	
	R 955	QRD161J-104	CARBON RESISTOR	100K 5% 1/6W	
	R 956	QRD161J-223	CARBON RESISTOR	22K 5% 1/6W	

BLOCK NO. 02

⚠	REF.	PARTS NO.	PARTS NAME	REMARKS	SUFFIX
	R 957	QRD161J-102	CARBON RESISTOR	10K 5% 1/6W	A,VX
	R 957	QRD161J-102	CARBON RESISTOR	10K 5% 1/6W	U,UB,UP,US,UT
	R 957	QRD161J-102	CARBON RESISTOR	10K 5% 1/6W	B,E,EN,G
	R 957	QRD161J-103	CARBON RESISTOR	100K 5% 1/6W	C,J
	R 958	QRZ0077-4R7X	FUSE RESISTOR	4.7 1/0W	
	R 959	QRD161J-104	CARBON RESISTOR	100K 5% 1/6W	
	R 960	QRD161J-223	CARBON RESISTOR	22K 5% 1/6W	
	R 961	QRD161J-104	CARBON RESISTOR	100K 5% 1/6W	
	R 962	QRD161J-103	CARBON RESISTOR	10K 5% 1/6W	
	R 963	QRD161J-122	CARBON RESISTOR	1.2K 5% 1/6W	
	R 964	QRD161J-681	CARBON RESISTOR	680 5% 1/6W	U,UB,UP,US,UT
	R 964	QRD161J-681	CARBON RESISTOR	680 5% 1/6W	B,E,EN,G
	R 964	QRD161J-681	CARBON RESISTOR	680 5% 1/6W	A,VX
	R 964	QRZ0077-681	FUSI.RESISTOR	680	C,J
	R 965	QRZ0077-681	FUSI.RESISTOR	680	C,J
	R 965	QRD161J-681	CARBON RESISTOR	680 5% 1/6W	A,VX
	R 965	QRD161J-681	CARBON RESISTOR	680 5% 1/6W	U,UB,UP,US,UT
	R 965	QRD161J-681	CARBON RESISTOR	680 5% 1/6W	B,E,EN,G
	R 966	QRD161J-821	CARBON RESISTOR	820 5% 1/6W	
	R 967	QRD161J-821	CARBON RESISTOR	820 5% 1/6W	
	R 968	QRD161J-103	CARBON RESISTOR	10K 5% 1/6W	
	R 969	QRD161J-103	CARBON RESISTOR	10K 5% 1/6W	
	R 971	QRD161J-563	CARBON RESISTOR	56K 5% 1/6W	
	R 972	QRD161J-563	CARBON RESISTOR	56K 5% 1/6W	
	R 973	QRD167J-4R7	CARBON RESISTOR	4.7 5% 1/6W	B,E,EN,G
	R 974	QRD167J-4R7	CARBON RESISTOR	4.7 5% 1/6W	B,E,EN,G
	R 975	QRD161J-104	CARBON RESISTOR	100K 5% 1/6W	
	R 976	QRD161J-103	CARBON RESISTOR	10K 5% 1/6W	
	R 977	QRD161J-104	CARBON RESISTOR	82K 5% 1/6W	
	R 978	QRD161J-104	CARBON RESISTOR	100K 5% 1/6W	
	R 982	QRZ0077-220X	F.RESISTOR	22 1/0W	C,J
	R 998	QRD161J-103	CARBON RESISTOR	10K 5% 1/6W	U,UB,UP,US,UT
	R 999	QRD161J-103	CARBON RESISTOR	10K 5% 1/6W	U,UB,UP,US,UT
	RY901	ESK7D24-213R	RELAY		
	R997	QRD161J-103	CARBON RESISTOR	10K 5% 1/6W	U,UB,UP,US,UT
	S 001	QSW0524-001	LEVER SWITCH		U,UB,UP,US,UT
	TB001	EMZ4001-002Z	TAB		
	TB002	EMZ4001-002Z	TAB		

■ System C P U & Operation Switch Board

BLOCK NO. 03

⚠	REF.	PARTS NO.	PARTS NAME	REMARKS	SUFFIX
	C 461	QEK41CM-476	E.CAPACITOR	47MF 20% 16V	
	C 462	QCBB1HK-102Y	C.CAPACITOR	1000PF 10% 50V	
	C 701	QEK51HM-226	E.CAPACITOR	22MF 20% 50V	
	C 702	QEK51HM-226	E.CAPACITOR	22MF 20% 50V	
	C 703	QFV71HJ-124ZM	FILM CAPACITOR	.12MF 5% 50V	
	C 704	QCBB1HK-151Y	C.CAPACITOR	150PF 10% 50V	
	C 705	QCBB1HK-151Y	C.CAPACITOR	150PF 10% 50V	
	C 708	QCBB1HK-151Y	C.CAPACITOR	150PF 10% 50V	
	C 709	QCBB1HK-102Y	C.CAPACITOR	1000PF 10% 50V	
	C 713	QCBB1HK-102Y	C.CAPACITOR	1000PF 10% 50V	
	C 714	QCBB1HK-102Y	C.CAPACITOR	1000PF 10% 50V	
	C 715	QER41CM-106	E.CAPACITOR	10MF 20% 16V	
	C 716	QER41HM-105VM	E.CAPACITOR	1.0MF 20% 50V	
	C 717	QEK61AM-227ZM	E.CAPACITOR	220MF 20% 10V	
	C 718	QEK60JM-107ZM	E.CAPACITOR	100MF 20% 6.3V	
	C 719	QCBB1HK-102Y	C.CAPACITOR	1000PF 10% 50V	
	C 720	QCS11HJ-220	C.CAPACITOR	22PF 5% 50V	
	C 721	QCS11HJ-220	C.CAPACITOR	22PF 5% 50V	
	C 722	QCBB1HK-102Y	C.CAPACITOR	1000PF 10% 50V	
	C 723	QCS31HJ-390Z	C.CAPACITOR	39PF 5% 50V	
	C 724	QCS11HJ-180	C.CAPACITOR	18PF 5% 50V	
	C 725	QCS11HJ-220	C.CAPACITOR	22PF 5% 50V	
	C 726	QCS31HJ-390Z	C.CAPACITOR	39PF 5% 50V	
	C 727	QCBB1HK-102Y	C.CAPACITOR	1000PF 10% 50V	
	C 728	QCBB1HK-102Y	C.CAPACITOR	1000PF 10% 50V	
	C 730	QCBB1HK-102Y	C.CAPACITOR	1000PF 10% 50V	
	C 731	QCBB1HK-101Y	C.CAPACITOR	100PF 10% 50V	
	C 732	QEK61AM-227ZM	E.CAPACITOR	220MF 20% 10V	
	C 733	QCVB1CN-103Y	C.CAPACITOR	.010MF 30% 16V	
	C 734	QCVB1CN-103Y	C.CAPACITOR	.010MF 30% 16V	
	C 735	QEK41CM-476	E.CAPACITOR	47MF 20% 16V	
	C 737	QCBB1HK-151Y	C.CAPACITOR	150PF 10% 50V	
	C 840	QCBB1HK-102Y	C.CAPACITOR	1000PF 10% 50V	
	C 841	QCBB1HK-102Y	C.CAPACITOR	1000PF 10% 50V	
	C 842	QCGB1HK-102	C.CAPACITOR	1000PF 10% 50V	B,E,EN,G
	C 850	QETC1HM-224Z	E.CAPACITOR	.22MF 20% 50V	U,UB,UP,US,UT
	C 851	EETB1HM-475E	E.CAPACITOR		U,UB,UP,US,UT
	C 852	EETB1CM-226E	E.CAPACITOR		U,UB,UP,US,UT
	C 853	QFLC1HJ-104ZM	M CAPACITOR	.10MF 5% 50V	U,UB,UP,US,UT
	C 854	QETB1HM-474N	E.CAPACITOR	.47MF 20% 50V	U,UB,UP,US,UT
	C 855	QCXB1CM-562Y	C.CAPACITOR	5600PF 20% 16V	U,UB,UP,US,UT
	C 856	QCGB1HK-821	C.CAPACITOR	820PF 10% 50V	U,UB,UP,US,UT
	C 857	QFLC1HJ-183ZM	M CAPACITOR	.018MF 5% 50V	U,UB,UP,US,UT
	C 858	QFLC1HJ-104ZM	M CAPACITOR	.10MF 5% 50V	U,UB,UP,US,UT
	C 859	QFLC1HJ-104ZM	M CAPACITOR	.10MF 5% 50V	U,UB,UP,US,UT
	C 860	QCXB1CM-682Y	C.CAPACITOR	6800PF 20% 16V	U,UB,UP,US,UT
	C 861	QFLC1HJ-183ZM	M CAPACITOR	.018MF 5% 50V	U,UB,UP,US,UT
	C 862	QETC1HM-224Z	E.CAPACITOR	.22MF 20% 50V	U,UB,UP,US,UT
	C 863	QETC1HM-224Z	E.CAPACITOR	.22MF 20% 50V	U,UB,UP,US,UT
	C 864	QFLC1HJ-104ZM	M CAPACITOR	.10MF 5% 50V	U,UB,UP,US,UT
	C 865	QEK41HM-474	E.CAPACITOR	.47MF 20% 50V	U,UB,UP,US,UT
	C 866	QCXB1CM-562Y	C.CAPACITOR	5600PF 20% 16V	U,UB,UP,US,UT
	C 867	QCGB1HK-821	C.CAPACITOR	820PF 10% 50V	U,UB,UP,US,UT
	C 868	QCBB1HK-221Y	C.CAPACITOR	220PF 10% 50V	U,UB,UP,US,UT
	C 869	QCBB1HK-221Y	C.CAPACITOR	220PF 10% 50V	U,UB,UP,US,UT

BLOCK NO. 03

⚠	REF.	PARTS NO.	PARTS NAME	REMARKS	SUFFIX
	C 870	QCBB1HK-221Y	C.CAPACITOR	220PF 10% 50V	U,UB,UP,US,UT
	C 871	QFLC1HJ-103ZM	M CAPACITOR	.010MF 5% 50V	U,UB,UP,US,UT
	C 872	EETB1HM-475E	E.CAPACITOR		U,UB,UP,US,UT
	C 873	QET41AM-227	E CAPACITOR	220MF 20% 10V	U,UB,UP,US,UT
	C 874	EETB1AM-107E	E.CAPACITOR		U,UB,UP,US,UT
	C 875	EETB1HM-475E	E.CAPACITOR		U,UB,UP,US,UT
	C 876	QCBB1HK-151Y	C.CAPACITOR	150PF 10% 50V	U,UB,UP,US,UT
	C 878	QCBB1HK-151Y	C.CAPACITOR	150PF 10% 50V	U,UB,UP,US,UT
	C 879	QCBB1HK-331Y	C.CAPACITOR	330PF 10% 50V	U,UB,UP,US,UT
	C 880	QETC1HM-225ZM	E.CAPACITOR	2.2MF 20% 50V	U,UB,UP,US,UT
	C 883	QET41CM-107	E CAPACITOR	100MF 20% 16V	U,UB,UP,US,UT
	C 884	QET41CM-227	E CAPACITOR	220MF 20% 16V	U,UB,UP,US,UT
	CN700	EMV7160-011	CONNECTOR		
	CN701	VMC0163-R29	CONNECTOR		
	CN840	EMV7125-004R	CONNECTOR		U,UB,UP,US,UT
	CN852	EMV5125-004	CONNECTOR		U,UB,UP,US,UT
	D 411	SLA-380LT	LED		B,E,EN,G
	D 411	SLR-342VC3F	LED		C,J
	D 411	SLA-380LT	LED		U,UB,UP,US,UT
	D 411	SLA-380LT	LED		A,VX
	D 412	SLR-342MCA47	LED		
	D 413	SLR-342MCA47	LED		
	D 414	SLR-342MCA47	LED		
	D 415	SLR-342MCA47	LED		
	D 701	1SS133	SI DIODE		
	D 702	1SS133	SI DIODE		
	D 703	1SS133	SI DIODE		
	D 704	1SS133	SI DIODE		
	D 705	MTZ5.1JAT-77	ZENER DIODE		
	D 706	1SS133	SI DIODE		
	D 850	MTZ5.1JB	ZENER DIODE		U,UB,UP,US,UT
	D 851	1SS133	SI DIODE		U,UB,UP,US,UT
	FL701	QLF0021-001	FL TUBE		
	FW700	VWSC02-103K3K	TM FLAT		
	FW701	VWSC06-093K3K	EF FLAT WIRE		
	FW702	VWSC06-093K3K	EF FLAT WIRE		
	FW852	EWR35D-30LS	FLAT WIRE		U,UB,UP,US,UT
	IC404	GP1U261X	IR DETECT UNIT		
	IC701	UPD78044FGF-055	IC		A,C,J,VX
	IC701	UPD78044FGF-055	IC		B,E,EN,G
	IC701	UPD78044FGF-067	IC		U,UB,UP,US,UT
	IC850	BA7725S	IC		U,UB,UP,US,UT
	IC851	BU9251S	IC		U,UB,UP,US,UT
	IC852	BA15218N	IC		U,UB,UP,US,UT
	J 850	VMJ4024-001	JACK	HEAD PHONE	
	J 851	QNS0007-002	6.3 JACK	MIC JACK	U,UB,UP,US,UT
	J 851	QNS0007-002	6.3 JACK	MIC JACK	U,UB,UP,US,UT
	JS701	QSW0538-001	ROTARY ENCODER		
	L 701	VQP0026-470Z	INDUCTOR		
	L 702	VQP0026-470Z	INDUCTOR		
	L 703	VQP0033-100Z	INDUCTOR		
	L 704	VQP0018-4R7	INDUCTOR		
	L 705	VQP0018-4R7	INDUCTOR		
	L 706	VQP0033-100Z	INDUCTOR		
	L 707	VQP0033-100Z	INDUCTOR		

BLOCK NO. 03

⚠	REF.	PARTS NO.	PARTS NAME	REMARKS	SUFFIX
	L 708	VQP0018-220	INDUCTOR		
	L 709	VQZ0048-009	INDUCTOR		
	L 840	EQL4007-2R2T	INDUCTOR	HP GND(D401T)	
	L 841	VQP0018-470	INDUCTOR	EMC	B,E,EN,G
	L 842	VQP0018-470	INDUCTOR	EMC	B,E,EN,G
	Q 470	DTC114ESTP	TRANSISTOR		
	Q 471	DTC114ESTP	TRANSISTOR		
	Q 472	DTA114ES	TRANSISTOR		
	Q 473	DTA114ES	TRANSISTOR		
	Q 703	2SC2785	TRANSISTOR		
	Q 704	DTC114TSTP	TRANSISTOR		
	Q 705	2SA1175	TRANSISTOR		
	Q 706	2SC2668(O)	TRANSISTOR		
	Q 707	2SC2668(O)	TRANSISTOR		
	Q 710	DTC114ESTP	TRANSISTOR		
	Q 711	2SD2144S(VW)	TRANSISTOR		
	Q 771	2SC945(P,Q)	TRANSISTOR		
	Q 772	2SC945(P,Q)	TRANSISTOR		
	Q 773	2SC945(P,Q)	TRANSISTOR		
	Q 850	DTC144ES	D.TRANSISTOR		U,UB,UP,US,UT
	Q 851	2SD2144S(VW)	TRANSISTOR		U,UB,UP,US,UT
	R 470	QRD161J-102	CARBON RESISTOR	1.0K 5% 1/6W	
	R 471	QRD161J-122	CARBON RESISTOR	1.2K 5% 1/6W	
	R 472	QRD161J-152	CARBON RESISTOR	1.5K 5% 1/6W	
	R 473	QRD161J-222	CARBON RESISTOR	2.2K 5% 1/6W	
	R 474	QRD161J-272	CARBON RESISTOR	2.7K 5% 1/6W	
	R 475	QRD161J-392	CARBON RESISTOR	3.9K 5% 1/6W	
	R 476	QRD167J-562	CARBON RESISTOR	5.6K 5% 1/6W	
	R 477	QRD161J-103	CARBON RESISTOR	10K 5% 1/6W	
	R 478	QRD161J-183	CARBON RESISTOR	18K 5% 1/6W	
	R 479	QRD161J-473	CARBON RESISTOR	47K 5% 1/6W	C,J
	R 479	QRD161J-473	CARBON RESISTOR	47K 5% 1/6W	B,E,EN,G
	R 480	QRD161J-103	CARBON RESISTOR	10K 5% 1/6W	
	R 481	QRD161J-183	CARBON RESISTOR	18K 5% 1/6W	
	R 482	QRD161J-473	CARBON RESISTOR	47K 5% 1/6W	
	R 484	QRD161J-102	CARBON RESISTOR	1.0K 5% 1/6W	
	R 486	QRD161J-271	CARBON RESISTOR	270 5% 1/6W	
	R 487	QRD161J-271	CARBON RESISTOR	270 5% 1/6W	
	R 488	QRD161J-271	CARBON RESISTOR	270 5% 1/6W	
	R 489	QRD161J-271	CARBON RESISTOR	270 5% 1/6W	
	R 490	QRD161J-301	CARBON RESISTOR	300 5% 1/6W	
	R 491	QRD161J-301	CARBON RESISTOR	300 5% 1/6W	U,UB,UP,US,UT
	R 491	QRD161J-301	CARBON RESISTOR	300 5% 1/6W	A,VX
	R 491	QRD161J-301	CARBON RESISTOR	300 5% 1/6W	B,E,EN,G
	R 491	QRD161J-301	CARBON RESISTOR	300 5% 1/6W	
	R 690	QRD161J-102	CARBON RESISTOR	1.0K 5% 1/6W	
	R 691	QRD161J-102	CARBON RESISTOR	1.0K 5% 1/6W	
	R 692	QRD161J-122	CARBON RESISTOR	1.2K 5% 1/6W	
	R 693	QRD161J-152	CARBON RESISTOR	1.5K 5% 1/6W	
	R 694	QRD161J-222	CARBON RESISTOR	2.2K 5% 1/6W	
	R 695	QRD161J-272	CARBON RESISTOR	2.7K 5% 1/6W	
	R 696	QRD161J-392	CARBON RESISTOR	3.9K 5% 1/6W	
	R 697	QRD167J-562	CARBON RESISTOR	5.6K 5% 1/6W	
	R 698	QRD161J-753	CARBON RESISTOR	75K 5% 1/6W	B,E,EN,G
	R 698	QRD161J-183	CARBON RESISTOR	75K 5% 1/6W	VX

BLOCK NO. 03

⚠	REF.	PARTS NO.	PARTS NAME	REMARKS	SUFFIX
	R 699	QRD161J-103	CARBON RESISTOR	10K 5% 1/6W	VX
	R 700	QRD161J-103	CARBON RESISTOR	10K 5% 1/6W	
	R 701	QRD161J-222	CARBON RESISTOR	2.2K 5% 1/6W	
	R 702	QRD161J-222	CARBON RESISTOR	2.2K 5% 1/6W	
	R 703	QRD161J-222	CARBON RESISTOR	2.2K 5% 1/6W	
	R 704	QRD161J-222	CARBON RESISTOR	2.2K 5% 1/6W	
	R 705	QRD161J-222	CARBON RESISTOR	2.2K 5% 1/6W	
	R 707	QRD161J-102	CARBON RESISTOR	1.0K 5% 1/6W	
	R 708	QRD161J-222	CARBON RESISTOR	2.2K 5% 1/6W	
	R 709	QRD161J-222	CARBON RESISTOR	2.2K 5% 1/6W	
	R 710	QRD161J-222	CARBON RESISTOR	2.2K 5% 1/6W	
	R 711	QRD161J-222	CARBON RESISTOR	2.2K 5% 1/6W	
	R 712	QRD161J-222	CARBON RESISTOR	2.2K 5% 1/6W	
	R 713	QRD161J-222	CARBON RESISTOR	2.2K 5% 1/6W	
	R 714	QRD161J-222	CARBON RESISTOR	2.2K 5% 1/6W	
	R 715	QRD161J-222	CARBON RESISTOR	2.2K 5% 1/6W	
	R 716	QRD161J-222	CARBON RESISTOR	2.2K 5% 1/6W	
	R 717	QRD161J-222	CARBON RESISTOR	2.2K 5% 1/6W	
	R 718	QRD161J-222	CARBON RESISTOR	2.2K 5% 1/6W	
	R 719	QRD161J-222	CARBON RESISTOR	2.2K 5% 1/6W	
	R 720	QRD161J-222	CARBON RESISTOR	2.2K 5% 1/6W	
	R 721	QRD161J-102	CARBON RESISTOR	1.0K 5% 1/6W	
	R 722	QRD161J-222	CARBON RESISTOR	2.2K 5% 1/6W	
	R 723	QRD161J-222	CARBON RESISTOR	2.2K 5% 1/6W	
	R 724	QRD161J-222	CARBON RESISTOR	2.2K 5% 1/6W	
	R 725	QRD161J-222	CARBON RESISTOR	2.2K 5% 1/6W	
	R 726	QRD161J-222	CARBON RESISTOR	2.2K 5% 1/6W	
	R 727	QRD161J-102	CARBON RESISTOR	1.0K 5% 1/6W	
	R 728	QRD161J-222	CARBON RESISTOR	2.2K 5% 1/6W	
	R 729	QRD161J-102	CARBON RESISTOR	1.0K 5% 1/6W	
	R 730	QRD161J-222	CARBON RESISTOR	2.2K 5% 1/6W	
	R 731	QRD161J-102	CARBON RESISTOR	1.0K 5% 1/6W	
	R 732	QRD161J-222	CARBON RESISTOR	2.2K 5% 1/6W	
	R 733	QRD161J-222	CARBON RESISTOR	2.2K 5% 1/6W	
	R 736	QRD161J-222	CARBON RESISTOR	2.2K 5% 1/6W	
	R 737	QRD161J-222	CARBON RESISTOR	2.2K 5% 1/6W	
	R 738	QRD161J-224	CARBON RESISTOR	220K 5% 1/6W	
	R 739	QRD161J-103	CARBON RESISTOR	10K 5% 1/6W	
	R 740	QRD161J-224	CARBON RESISTOR	220K 5% 1/6W	
	R 741	QRD161J-103	CARBON RESISTOR	10K 5% 1/6W	
	R 742	QRD161J-224	CARBON RESISTOR	220K 5% 1/6W	
	R 743	QRD161J-103	CARBON RESISTOR	10K 5% 1/6W	
	R 744	QRD161J-103	CARBON RESISTOR	10K 5% 1/6W	
	R 745	QRD161J-473	CARBON RESISTOR	47K 5% 1/6W	
	R 747	QRD161J-102	CARBON RESISTOR	1.0K 5% 1/6W	
	R 748	QRD161J-103	CARBON RESISTOR	10K 5% 1/6W	
	R 750	QRD161J-103	CARBON RESISTOR	10K 5% 1/6W	
	R 752	QRD161J-103	CARBON RESISTOR	10K 5% 1/6W	
	R 753	QRD161J-222	CARBON RESISTOR	2.2K 5% 1/6W	
	R 754	QRD161J-472	CARBON RESISTOR	4.7K 5% 1/6W	
	R 755	QRD161J-104	CARBON RESISTOR	100K 5% 1/6W	
	R 756	QRD161J-104	CARBON RESISTOR	100K 5% 1/6W	
	R 757	QRD161J-103	CARBON RESISTOR	10K 5% 1/6W	
	R 758	QRD161J-103	CARBON RESISTOR	10K 5% 1/6W	
	R 759	QRD161J-273	CARBON RESISTOR	27K 5% 1/6W	

BLOCK NO. 03

⚠	REF.	PARTS NO.	PARTS NAME	REMARKS	SUFFIX
	R 760	QRD161J-563	CARBON RESISTOR	56K 5% 1/6W	
	R 761	QRD161J-103	CARBON RESISTOR	10K 5% 1/6W	
	R 762	QRD161J-104	CARBON RESISTOR	100K 5% 1/6W	
	R 764	QRD161J-273	CARBON RESISTOR	27K 5% 1/6W	
	R 765	QRD161J-331	CARBON RESISTOE	330 5% 1/6W	
	R 766	QRD161J-102	CARBON RESISTOR	1.0K 5% 1/6W	
	R 767	QRD161J-102	CARBON RESISTOR	1.0K 5% 1/6W	
	R 768	QRD161J-222	CARBON RESISTOR	2.2K 5% 1/6W	A,C,J,VX
	R 768	QRD161J-222	CARBON RESISTOR	2.2K 5% 1/6W	B,E,EN,G
	R 768	QRD161J-560	CARBON RESISTOR	56 5% 1/6W	U,UB,UP,US,UT
	R 769	QRD161J-222	CARBON RESISTOR	2.2K 5% 1/6W	
	R 770	QRD161J-223	CARBON RESISTOR	22K 5% 1/6W	
	R 771	QRD161J-223	CARBON RESISTOR	22K 5% 1/6W	
	R 772	QRD161J-103	CARBON RESISTOR	10K 5% 1/6W	
	R 773	QRD161J-103	CARBON RESISTOR	10K 5% 1/6W	
	R 774	QRD161J-472	CARBON RESISTOR	4.7K 5% 1/6W	
	R 775	QRD161J-331	CARBON RESISTOE	330 5% 1/6W	
	R 776	QRD161J-103	CARBON RESISTOR	10K 5% 1/6W	
	R 777	QRD161J-102	CARBON RESISTOR	1.0K 5% 1/6W	
	R 778	QRD161J-224	CARBON RESISTOR	220K 5% 1/6W	
	R 779	QRD161J-105	CARBON RESISTOR	1.0M 5% 1/6W	
	R 780	QRD161J-472	CARBON RESISTOR	4.7K 5% 1/6W	
	R 781	QRD161J-822	CARBON RESISTOR	8.2K 5% 1/6W	
	R 782	QRD161J-822	CARBON RESISTOR	8.2K 5% 1/6W	
	R 783	QRD161J-472	CARBON RESISTOR	4.7K 5% 1/6W	
	R 784	QRD161J-222	CARBON RESISTOR	2.2K 5% 1/6W	
	R 785	QRD161J-103	CARBON RESISTOR	10K 5% 1/6W	
	R 786	QRD161J-103	CARBON RESISTOR	10K 5% 1/6W	
	R 787	QRD161J-103	CARBON RESISTOR	10K 5% 1/6W	
	R 788	QRD161J-222	CARBON RESISTOR	2.2K 5% 1/6W	
	R 789	QRD161J-222	CARBON RESISTOR	2.2K 5% 1/6W	
	R 790	QRD161J-222	CARBON RESISTOR	2.2K 5% 1/6W	
	R 791	QRD161J-102	CARBON RESISTOR	1.0K 5% 1/6W	
	R 792	QRD161J-102	CARBON RESISTOR	1.0K 5% 1/6W	
	R 793	QRD161J-122	CARBON RESISTOR	1.2K 5% 1/6W	
	R 794	QRD161J-152	CARBON RESISTOR	1.5K 5% 1/6W	
	R 795	QRD161J-222	CARBON RESISTOR	2.2K 5% 1/6W	
	R 796	QRD161J-272	CARBON RESISTOR	2.7K 5% 1/6W	
	R 797	QRD161J-392	CARBON RESISTOR	3.9K 5% 1/6W	
	R 799	QRD167J-562	CARBON RESISTOR	5.6K 5% 1/6W	
	R 800	QRD161J-103	CARBON RESISTOR	10K 5% 1/6W	
	R 801	QRD161J-473	CARBON RESISTOR	47K 5% 1/6W	U,UB,UP,US,UT
	R 801	QRD161J-473	CARBON RESISTOR	47K 5% 1/6W	B,E,EN,G
	R 801	QRD161J-473	CARBON RESISTOR	47K 5% 1/6W	A,VX
	R 840	QRD161J-472	CARBON RESISTOR	4.7K 5% 1/6W	U,UB,UP,US,UT
	R 841	QRD161J-472	CARBON RESISTOR	4.7K 5% 1/6W	U,UB,UP,US,UT
	R 850	QRD161J-123	CARBON RESISTOR	12K 5% 1/6W	U,UB,UP,US,UT
	R 851	QRD161J-333	CARBON RESISTOR	33K 5% 1/6W	U,UB,UP,US,UT
	R 852	QRD161J-123	CARBON RESISTOR	12K 5% 1/6W	U,UB,UP,US,UT
	R 853	QRD161J-103	CARBON RESISTOR	10K 5% 1/6W	U,UB,UP,US
	R 854	QRD161J-103	CARBON RESISTOR	10K 5% 1/6W	U,UB,UP,US
	R 855	QRD161J-103	CARBON RESISTOR	10K 5% 1/6W	U,UB,UP,US
	R 856	QRD161J-472	CARBON RESISTOR	4.7K 5% 1/6W	U,UB,UP,US
	R 857	QRD161J-103	CARBON RESISTOR	10K 5% 1/6W	U,UB,UP,US
	R 858	QRD161J-103	CARBON RESISTOR	10K 5% 1/6W	U,UB,UP,US

BLOCK NO. 03

REF.	PARTS NO.	PARTS NAME	REMARKS	SUFFIX
R 859	QRD161J-103	CARBON RESISTOR	10K 5% 1/6W	U,UB,UP,US
R 860	QRD161J-331	CARBON RESISTOE	330 5% 1/6W	U,UB,UP,US
R 861	QRD167J-682	CARBON RESISTOR	6.8K 5% 1/6W	U,UB,UP,US
R 862	QRD161J-105	CARBON RESISTOR	1.0M 5% 1/6W	U,UB,UP,US
R 864	QRD161J-103	CARBON RESISTOR	10K 5% 1/6W	U,UB,UP,US
R 865	QRD161J-123	CARBON RESISTOR	12K 5% 1/6W	U,UB,UP,US
R 866	QRD161J-391	CARBON RESISTOR	390 5% 1/6W	U,UB,UP,US
R 867	QRD161J-152	CARBON RESISTOR	1.5K 5% 1/6W	U,UB,UP,US
R 868	QRD161J-475	CARBON RESISTOR	4.7M 5% 1/6W	U,UB,UP,US,UT
R 869	QRD167J-430	CARBON RESISTOR	43 5% 1/6W	U,UB,UP,US,UT
R 870	QRD161J-273	CARBON RESISTOR	27K 5% 1/6W	U,UB,UP,US,UT
R 873	QRD161J-102	CARBON RESISTOR	1.0K 5% 1/6W	U,UB,UP,US,UT
R 874	QRD161J-561	CARBON RESISTOR	560 5% 1/6W	U,UB,UP,US,UT
R 875	QRD161J-472	CARBON RESISTOR	4.7K 5% 1/6W	U,UB,UP,US,UT
R 876	QRD161J-221	CARBON RESISTOR	220 5% 1/6W	U,UB,UP,US,UT
R 877	QRD161J-153	CARBON RESISTOR	15K 5% 1/6W	U,UB,UP,US,UT
R 878	QRD161J-221	CARBON RESISTOR	220 5% 1/6W	U,UB,UP,US,UT
R 879	QRD161J-152	CARBON RESISTOR	1.5K 5% 1/6W	U,UB,UP,US,UT
R 880	QRD161J-221	CARBON RESISTOR	220 5% 1/6W	U,UB,UP,US,UT
R 881	QRD161J-823	CARBON RESISTOR	82K 5% 1/6W	U,UB,UP,US,UT
R 882	QRD161J-392	CARBON RESISTOR	3.9K 5% 1/6W	U,UB,UP,US,UT
RA700	QRB139J-224	NET RESISTOR	220K 5% 1/3W	
RA701	QRB149J-224	R.NETWORK	220K 5% 1/4W	
S 406	QSQ1A11-V04Z	TACT SWITCH		
S 407	QSQ1A11-V04Z	TACT SWITCH		
S 408	QSQ1A11-V04Z	TACT SWITCH		
S 409	QSQ1A11-V04Z	TACT SWITCH		
S 414	QSQ1A11-V04Z	TACT SWITCH		
S 415	QSQ1A11-V04Z	TACT SWITCH		
S 416	QSQ1A11-V04Z	TACT SWITCH		
S 417	QSQ1A11-V04Z	TACT SWITCH		
S 418	QSQ1A11-V04Z	TACT SWITCH		
S 422	QSQ1A11-V04Z	TACT SWITCH		
S 423	QSQ1A11-V04Z	TACT SWITCH		
S 424	QSQ1A11-V04Z	TACT SWITCH		
S 425	QSQ1A11-V04Z	TACT SWITCH		
S 426	QSQ1A11-V04Z	TACT SWITCH		
S 700	QSQ1A11-V04Z	TACT SWITCH		
S 701	QSQ1A11-V04Z	TACT SWITCH		
S 702	QSQ1A11-V04Z	TACT SWITCH		
S 703	QSQ1A11-V04Z	TACT SWITCH		
S 704	QSQ1A11-V04Z	TACT SWITCH		
S 705	QSQ1A11-V04Z	TACT SWITCH		
S 706	QSQ1A11-V04Z	TACT SWITCH		
S 707	QSQ1A11-V04Z	TACT SWITCH		
S 708	QSQ1A11-V04Z	TACT SWITCH		
S 709	QSQ1A11-V04Z	TACT SWITCH		
S 714	QSQ1A11-V04Z	TACT SWITCH		
S 715	QSQ1A11-V04Z	TACT SWITCH		
SP701	VYH7653-001	IC HOLDER		
VR840	QVQ0045-B54	V RESISTOR	MIC VR	U,UB,UP,US,UT
X 701	VCX5000-002	CRYSTAL		
X 702	M2Z4.19	CERA LOCK		
X 850	ECX0000-400KS	RESONATOR		U,UB,UP,US,UT

CD Servo Control Board

BLOCK NO. 04

REF.	PARTS NO.	PARTS NAME	REMARKS	SUFFIX
C 604	QEK61AM-107Z	E.CAPACITOR	100MF 20% 10V	
C 605	EETB1EM-106E	E.CAPACITOR		
C 606	QCBB1HK-102Y	C.CAPACITOR	1000PF 10% 50V	
C 607	QCBB1HK-102Y	C.CAPACITOR	1000PF 10% 50V	
C 608	EETB1HM-105E	E.CAPACITOR		
C 609	QCBB1HK-101Y	C.CAPACITOR	100PF 10% 50V	
C 610	QFLC1HJ-273ZM	M CAPACITOR	.027MF 5% 50V	
C 611	QCXB1CM-222Y	C.CAPACITOR	2200PF 20% 16V	
C 612	QCVB1CM-103Y	C.CAPACITOR	.010MF 20% 16V	
C 613	QCBB1HK-331Y	C.CAPACITOR	330PF 10% 50V	
C 614	QFLC1HJ-104ZM	M CAPACITOR	.10MF 5% 50V	
C 615	QCHB1EZ-223	C.CAPACITOR	.022MF +80:-20%	
C 616	QCHB1EZ-223	C.CAPACITOR	.022MF +80:-20%	
C 617	QCHB1EZ-223	C.CAPACITOR	.022MF +80:-20%	
C 618	QCXB1CM-222Y	C.CAPACITOR	2200PF 20% 16V	
C 619	QCBB1HK-271Y	C.CAPACITOR	270PF 10% 50V	
C 620	QCS11HJ-470	C.CAPACITOR	47PF 5% 50V	
C 621	QCBB1HK-821Y	C.CAPACITOR	820PF 10% 50V	
C 622	EETB1AM-476E	E.CAPACITOR		
C 623	QFLC1HJ-104ZM	M CAPACITOR	.10MF 5% 50V	
C 628	QCC11EM-473V	C.CAPACITOR	.047MF 20% 25V	
C 629	EETB1AM-107E	E.CAPACITOR		
C 631	QET41AM-477	E CAPACITOR	470MF 20% 10V	
C 632	QEK61AM-107Z	E.CAPACITOR	100MF 20% 10V	
C 651	QCS11HJ-120	C.CAPACITOR	12PF 5% 50V	
C 652	QCS11HJ-150	C.CAPACITOR	15PF 5% 50V	
C 653	QCHB1EZ-223	C.CAPACITOR	.022MF +80:-20%	
C 655	QCC11EM-473V	C.CAPACITOR	.047MF 20% 25V	
C 661	QCBB1HK-471Y	C.CAPACITOR	470PF 10% 50V	
C 662	QCHB1EZ-223	C.CAPACITOR	.022MF +80:-20%	
C 663	QFLC1HJ-223ZM	M CAPACITOR	.022MF 5% 50V	
C 664	QCHB1EZ-223	C.CAPACITOR	.022MF +80:-20%	
C 665	QFV71HJ-334ZM	FILM CAPACITOR	.33MF 5% 50V	
C 671	QCXB1CM-222Y	C.CAPACITOR	2200PF 20% 16V	
C 672	QCXB1CM-222Y	C.CAPACITOR	2200PF 20% 16V	
C 673	QET41AM-227	E CAPACITOR	220MF 20% 10V	
C 674	QCHB1EZ-223	C.CAPACITOR	.022MF +80:-20%	
C 675	QCBB1HK-102Y	C.CAPACITOR	1000PF 10% 50V	
C 676	QCBB1HK-102Y	C.CAPACITOR	1000PF 10% 50V	
C 691	QCBB1HK-151Y	C.CAPACITOR	150PF 10% 50V	
C 692	QCBB1HK-151Y	C.CAPACITOR	150PF 10% 50V	
C 693	QCBB1HK-151Y	C.CAPACITOR	150PF 10% 50V	
C 694	QCBB1HK-151Y	C.CAPACITOR	150PF 10% 50V	
CN601	EMV7144-015R	15PIN CONNECTOR		
CN602	EMV5109-006A	6P PLUG ASSY		
CN603	VMC0163-R07	CONNECTOR		
CN604	VMC0163-R11	CONNECTOR		
CN605	VMC0041-003	CONNECTOR		
D 661	1SS133	SI DIODE		
IC601	AN8806SB	IC		
IC602	BA6897FPW	IC		
IC603	MN35510-S	IC		
Q 601	2SA952(L,K)	TRANSISTOR		
Q 631	2SA952(L,K)	TRANSISTOR		
R 601	QRD161J-123	CARBON RESISTOR	12K 5% 1/6W	

BLOCK NO. 04

⚠	REF.	PARTS NO.	PARTS NAME	REMARKS	SUFFIX
	R 603	QRD161J-125	CARBON RESISTOR	1.2M 5% 1/6W	
	R 605	QRD167J-134	CARBON RESISTOR	130K 5% 1/6W	
	R 606	QRD161J-913	CARBON RESISTOR	91K 5% 1/6W	
	R 607	QRD161J-273	CARBON RESISTOR	27K 5% 1/6W	
	R 609	QRD161J-114	CARBON RESISTOR	110K 5% 1/6W	
	R 610	QRD161J-154	CARBON RESISTOR	150K 5% 1/6W	
	R 612	QRD161J-103	CARBON RESISTOR	10K 5% 1/6W	
	R 613	QRD161J-121	CARBON RESISTOR	120 5% 1/6W	
	R 614	QRD161J-100	CARBON RESISTOR	10 5% 1/6W	
	R 615	QRD161J-120	CARBON RESISTOR	12 5% 1/6W	
	R 616	QRD161J-910Y	CARBON RESISTOR	91 5% 1/6W	
	R 621	QRD161J-330	CARBON RESISTOR	33 5% 1/6W	
	R 622	QRD161J-330	CARBON RESISTOR	33 5% 1/6W	
	R 623	QRD161J-330	CARBON RESISTOR	33 5% 1/6W	
	R 631	QRD161J-331	CARBON RESISTOE	330 5% 1/6W	
	R 632	QRD161J-101	CARBON RESISTOR	100 5% 1/6W	
	R 633	QRD161J-273	CARBON RESISTOR	27K 5% 1/6W	
	R 641	QRD161J-563	CARBON RESISTOR	56K 5% 1/6W	
	R 642	QRD161J-123	CARBON RESISTOR	12K 5% 1/6W	
	R 643	QRD161J-822	CARBON RESISTOR	8.2K 5% 1/6W	
	R 644	QRD161J-223	CARBON RESISTOR	22K 5% 1/6W	
	R 645	QRD161J-223	CARBON RESISTOR	22K 5% 1/6W	
	R 646	QRD161J-182	CARBON RESISTOR	1.8K 5% 1/6W	
	R 647	QRD167J-562	CARBON RESISTOR	5.6K 5% 1/6W	
	R 651	QRD161J-102	CARBON RESISTOR	1.0K 5% 1/6W	
	R 652	QRD161J-102	CARBON RESISTOR	1.0K 5% 1/6W	
	R 653	QRD161J-471	CARBON RESISTOR	470 5% 1/6W	
	R 654	QRD161J-102	CARBON RESISTOR	1.0K 5% 1/6W	
	R 655	QRD161J-471	CARBON RESISTOR	470 5% 1/6W	
	R 659	QRD161J-471	CARBON RESISTOR	470 5% 1/6W	
	R 661	QRD161J-104	CARBON RESISTOR	100K 5% 1/6W	
	R 663	QRD161J-124	CARBON RESISTOR	120K 5% 1/6W	
	R 664	QRD161J-681	CARBON RESISTOR	680 5% 1/6W	
	R 666	QRD161J-220	CARBON RESISTOR	22 5% 1/6W	
	R 671	QRD161J-102	CARBON RESISTOR	1.0K 5% 1/6W	
	R 672	QRD161J-102	CARBON RESISTOR	1.0K 5% 1/6W	
	X 651	VCX5016-934V	CRYSTAL		

■ Actuator Motor Board

BLOCK NO. 05

⚠	REF.	PARTS NO.	PARTS NAME	REMARKS	SUFFIX
	C 803	QFLB1HJ-102	M.CAPACITOR	1000PF 5% 50V	
	C 804	QCFB1HZ-104Y	C.CAPACITOR	.10MF +80:-20%	
	C 805	QCVB1CM-103Y	C.CAPACITOR	.010MF 20% 16V	
	C 808	QFLB1HJ-102	M.CAPACITOR	1000PF 5% 50V	
	C 810	QCZ0205-155	ML.C.CAPACITOR	1.5MF	
	C 811	QCZ0205-155	ML.C.CAPACITOR	1.5MF	
	C 813	QCVB1CM-103Y	C.CAPACITOR	.010MF 20% 16V	
	C 821	QCBB1HK-102Y	C.CAPACITOR	1000PF 10% 50V	
	CN801	VMC0163-R10	CONNECTOR	TO MICON	
	CN802	VMC0289-P07	CONNECTOR	TO SWITCH PWB	
	CN803	VMC0324-12310	CONNECTOR	TO CAM SW PWB	
	IC802	TA8409S	IC		
	IC803	TA8409S	IC		
	L 801	VQP0018-100	INDUCTOR		
	L 802	VQP0033-100Z	INDUCTOR		
	L 803	VQP0033-100Z	INDUCTOR		
	L 804	VQP0033-100Z	INDUCTOR		
	R 805	QRD161J-102	CARBON RESISTOR	1.0K 5% 1/6W	
	R 806	QRD161J-471	CARBON RESISTOR	470 5% 1/6W	
	R 807	QRD161J-471	CARBON RESISTOR	470 5% 1/6W	
	R 808	QRD161J-102	CARBON RESISTOR	1.0K 5% 1/6W	
	R 810	QRD161J-684	CARBON RESISTOR	680K 5% 1/6W	
	R 811	QRD161J-105	CARBON RESISTOR	1.0M 5% 1/6W	
	R 813	QRD161J-102	CARBON RESISTOR	1.0K 5% 1/6W	
	R 814	QRD161J-102	CARBON RESISTOR	1.0K 5% 1/6W	
	R 815	QRD161J-102	CARBON RESISTOR	1.0K 5% 1/6W	
	R 816	QRD161J-102	CARBON RESISTOR	1.0K 5% 1/6W	
	R 817	QRD161J-102	CARBON RESISTOR	1.0K 5% 1/6W	
	R 818	QRD161J-102	CARBON RESISTOR	1.0K 5% 1/6W	
	R 819	QRD161J-102	CARBON RESISTOR	1.0K 5% 1/6W	
	R 820	QRD161J-102	CARBON RESISTOR	1.0K 5% 1/6W	
	R 821	QRD161J-102	CARBON RESISTOR	1.0K 5% 1/6W	
	R 822	QRD161J-102	CARBON RESISTOR	1.0K 5% 1/6W	
	R 823	QRD161J-102	CARBON RESISTOR	1.0K 5% 1/6W	
	R 824	QRD161J-102	CARBON RESISTOR	1.0K 5% 1/6W	
	R 825	QRD161J-102	CARBON RESISTOR	1.0K 5% 1/6W	
	R 826	QRD161J-102	CARBON RESISTOR	1.0K 5% 1/6W	
	R 827	QRD161J-102	CARBON RESISTOR	1.0K 5% 1/6W	
	R 828	QRD161J-102	CARBON RESISTOR	1.0K 5% 1/6W	
	R 829	QRD161J-102	CARBON RESISTOR	1.0K 5% 1/6W	
	R 830	QRD161J-102	CARBON RESISTOR	1.0K 5% 1/6W	
	R 832	QRD161J-181	CARBON RESISTOR	180 5% 1/6W	
	R 833	QRD161J-102	CARBON RESISTOR	1.0K 5% 1/6W	
	R 834	QRD161J-102	CARBON RESISTOR	1.0K 5% 1/6W	
	R 839	QRD167J-332	CARBON RESISTOR	3.3K 5% 1/6W	
	R 840	QRD167J-562	CARBON RESISTOR	5.6K 5% 1/6W	

■ CD Tray Select Switch Board

BLOCK NO. 06-□□□□□

⚠	REF.	PARTS NO.	PARTS NAME	REMARKS	SUFFIX
	CN804	VMC0289-S07	CONNECTOR		
	SW 1	QSEC001-E03	LEVER SWITCH		
	SW 2	QSEC001-E03	LEVER SWITCH		
	SW 3	QSEC001-E03	LEVER SWITCH		
	SW 4	QSEC001-E03	LEVER SWITCH		
	SW 5	QSEC001-E03	LEVER SWITCH		
	SW 6	QSEC001-E03	LEVER SWITCH		

■ Cam Switch Board

BLOCK NO. 07-□□□□□

⚠	REF.	PARTS NO.	PARTS NAME	REMARKS	SUFFIX
	CN	VMC0325-010	CONNECTOR		

■ Head Amplifier & Mechanism Control Board

BLOCK NO. 08

A	REF.	PARTS NO.	PARTS NAME	REMARKS	SUFFIX
	C 101	NCS21HJ-561AY	C CAPACITOR	560PF 5% 50V	
	C 102	NCS21HJ-331AY	C CAPACITOR	330PF 5% 50V	
	C 103	NCS21HJ-561AY	C CAPACITOR	560PF 5% 50V	
	C 104	NCS21HJ-221AY	C CAPACITOR	220PF 5% 50V	
	C 105	QEK40JM-227	E.CAPACITOR	220MF 20% 6.3V	
	C 106	NCB21HK-333AY	C CAPACITOR	.033MF 10% 50V	
	C 107	QEK41EM-475	E.CAPACITOR	4.7MF 20% 25V	
	C 108	NCB21HK-393AY	C CAPACITOR	.039MF 10% 50V	
	C 109	NCB21HK-563AY	C CAPACITOR	.056MF 10% 50V	
	C 110	NCS21HJ-221AY	C CAPACITOR	220PF 5% 50V	
	C 111	QEK41HM-104	E.CAPACITOR	.10MF 20% 50V	
	C 112	QEK41CM-106	E.CAPACITOR	10MF 20% 16V	
	C 113	NCB21HK-332AY	C CAPACITOR	3300PF 10% 50V	
	C 114	QEK41EM-475	E.CAPACITOR	4.7MF 20% 25V	
	C 115	NCB21HK-153AY	C CAPACITOR	.015MF 10% 50V	
	C 116	NCB21HK-822AY	C CAPACITOR	8200PF 10% 50V	
	C 117	NCB21HK-223AY	C CAPACITOR	.022MF 10% 50V	
	C 118	NCB21HK-103AY	C CAPACITOR	.010MF 10% 50V	
	C 119	NCB21HK-563AY	C CAPACITOR	.056MF 10% 50V	
	C 120	NCS21HJ-330AY	C CAPACITOR	33PF 5% 50V	
	C 201	NCS21HJ-561AY	C CAPACITOR	560PF 5% 50V	
	C 202	NCS21HJ-331AY	C CAPACITOR	330PF 5% 50V	
	C 203	NCS21HJ-561AY	C CAPACITOR	560PF 5% 50V	
	C 204	NCS21HJ-221AY	C CAPACITOR	220PF 5% 50V	
	C 205	QEK40JM-227	E.CAPACITOR	220MF 20% 6.3V	
	C 206	NCB21HK-333AY	C CAPACITOR	.033MF 10% 50V	
	C 207	QEK41EM-475	E.CAPACITOR	4.7MF 20% 25V	
	C 208	NCB21HK-393AY	C CAPACITOR	.039MF 10% 50V	
	C 209	NCB21HK-563AY	C CAPACITOR	.056MF 10% 50V	
	C 210	NCS21HJ-221AY	C CAPACITOR	220PF 5% 50V	
	C 211	QEK41HM-104	E.CAPACITOR	.10MF 20% 50V	
	C 212	QEK41CM-106	E.CAPACITOR	10MF 20% 16V	
	C 213	NCB21HK-332AY	C CAPACITOR	3300PF 10% 50V	
	C 214	QEK41EM-475	E.CAPACITOR	4.7MF 20% 25V	
	C 215	NCB21HK-153AY	C CAPACITOR	.015MF 10% 50V	
	C 216	NCB21HK-822AY	C CAPACITOR	8200PF 10% 50V	
	C 217	NCB21HK-223AY	C CAPACITOR	.022MF 10% 50V	
	C 218	NCB21HK-103AY	C CAPACITOR	.010MF 10% 50V	
	C 219	NCB21HK-563AY	C CAPACITOR	.056MF 10% 50V	
	C 220	NCS21HJ-330AY	C CAPACITOR	33PF 5% 50V	
	C 301	QEK41CM-106	E.CAPACITOR	10MF 20% 16V	
	C 302	QEK41CM-476	E.CAPACITOR	47MF 20% 16V	
	C 303	QEK41CM-226	E.CAPACITOR	22MF 20% 16V	
	C 304	QEK41EM-475	E.CAPACITOR	4.7MF 20% 25V	
	C 305	NCB21HK-393AY	C CAPACITOR	.039MF 10% 50V	
	C 306	QEK40JM-227	E.CAPACITOR	220MF 20% 6.3V	
	C 308	NCB21HK-562AY	C CAPACITOR	5600PF 10% 50V	
	C 309	NCB21HK-562AY	C CAPACITOR	5600PF 10% 50V	
	C 310	NCB21HK-223AY	C CAPACITOR	.022MF 10% 50V	
	C 311	NCB21HK-682AY	C CAPACITOR	6800PF 10% 50V	
	C 313	QEKF1AM-107ZM	E.CAPACITOR	100MF 20% 10V	
	C 314	QCZ0205-155	ML.C.CAPACITOR	1.5MF	
	C 315	QCZ0205-155	ML.C.CAPACITOR	1.5MF	
	C 316	QFG32AJ-103ZN	PP CAPACITOR	.010MF 5% 100V	
	C 318	NCB21HK-103AY	C CAPACITOR	.010MF 10% 50V	

BLOCK NO. 08

A	REF.	PARTS NO.	PARTS NAME	REMARKS	SUFFIX
	C 319	QFG32AJ-821ZN	TF CAPACITOR	820PF 5% 100V	
	C 321	NCB21HK-103AY	C CAPACITOR	.010MF 10% 50V	
	C 322	QFG32AJ-152ZN	M CAPACITOR	1500PF 5% 100V	
	C 327	QEK41CM-476	E.CAPACITOR	47MF 20% 16V	
	C 328	NCS21HJ-151AY	C CAPACITOR	150PF 5% 50V	
	C 329	NCS21HJ-151AY	C CAPACITOR	150PF 5% 50V	
	C 330	NCS21HJ-151AY	C CAPACITOR	150PF 5% 50V	
	C 332	NCS21HJ-151AY	C CAPACITOR	150PF 5% 50V	
	C 335	NCB21HK-103AY	C CAPACITOR	.010MF 10% 50V	
	C 336	NCB21HK-103AY	C CAPACITOR	.010MF 10% 50V	
	C 337	NCB21HK-103AY	C CAPACITOR	.010MF 10% 50V	
	C 338	NCB21HK-103AY	C CAPACITOR	.010MF 10% 50V	
	C 339	QEK41CM-476	E.CAPACITOR	47MF 20% 16V	
	C 340	NCB21HK-103AY	C CAPACITOR	.010MF 10% 50V	
	C 341	QEKF1AM-107ZM	E.CAPACITOR	100MF 20% 10V	
	C 342	QEK41EM-475	E.CAPACITOR	4.7MF 20% 25V	
	C 343	QET41CM-106	E.CAPACITOR	10MF 20% 16V	
	C 344	NCB21HK-472AY	C CAPACITOR	4700PF 10% 50V	
	CN301	VMC0163-R06	CONNECTOR		
	CN302	VMC0163-R06	CONNECTOR		
	CN303	QGB2011M1-10	PWB CONECTOR		
	CN304	QGB2011M1-10	PWB CONECTOR		
	CN305	VMC0163-R10	CONNECTOR		
	CN306	VMC0163-R11	CONNECTOR		
	D 301	MA704A	S.K.DIODE		
	D 302	MA152WK-TX	SI DIODE		
	D 307	MA3051(M)	ZENER DIODE		
	D 308	MA3051(M)	ZENER DIODE		
	D 309	MA704A	S.K.DIODE		
	IC301	BA3126N	IC		
	IC302	AN7345K	IC		
	IC303	BU4094BCF-X	IC		
	IC304	BU4094BCF-X	IC		
	L 301	QQR0620-001	OSC COIL(BIAS)		
	L 303	VQP0033-100Z	INDUCTOR		
	Q 101	FA1A4ZX	TRANSISTOR		
	Q 102	DTC144TKA-X	TRANSISTOR		
	Q 103	FA1L4M	TRANSISTOR		
	Q 104	FA1A4ZX	TRANSISTOR		
	Q 105	2SC2001(L,K)	TRANSISTOR		
	Q 201	FA1A4ZX	TRANSISTOR		
	Q 202	DTC144TKA-X	TRANSISTOR		
	Q 203	FA1L4M	TRANSISTOR		
	Q 204	FA1A4ZX	TRANSISTOR		
	Q 205	2SC2001(L,K)	TRANSISTOR		
	Q 301	DTC144TKA-X	TRANSISTOR		
	Q 302	2SC2001(L,K)	TRANSISTOR		
	Q 303	2SC2001(L,K)	TRANSISTOR		
	Q 304	2SC2001(L,K)	TRANSISTOR		
	Q 305	2SC2001(L,K)	TRANSISTOR		
	Q 306	2SC1623(6)	TRANSISTOR		
	Q 307	2SC1623(6)	TRANSISTOR		
	Q 308	2SC1623(6)	TRANSISTOR		
	Q 309	2SC1623(6)	TRANSISTOR		
	Q 312	2SB562(C)	TRANSISTOR		

BLOCK NO. 08

A	REF.	PARTS NO.	PARTS NAME	REMARKS	SUFFIX
	Q 313	2SC1623(6)	TRANSISTOR		
	Q 314	2SB562(C)	TRANSISTOR		
	Q 315	2SC1623(6)	TRANSISTOR		
	Q 316	2SA952(L,K)	TRANSISTOR		
	Q 317	FA1F4MX	CHIP TRANSISTOR		
	Q 318	FN1L4M	TRANSISTOR		
	Q 319	FA1L4M	TRANSISTOR		
	Q 320	FA1L4M	TRANSISTOR		
	Q 321	FA1L4M	TRANSISTOR		
	Q 322	FA1L4M	TRANSISTOR		
	Q 323	2SC1623(6)	TRANSISTOR		
	R 102	NRSA02J-102NY	MG RESISTOR	1.0K 5% 1/10W	
	R 103	NRSA02J-183NY	MG RESISTOR	18K 5% 1/10W	
	R 105	NRSA02J-220NY	MG RESISTOR	22 5% 1/10W	
	R 106	NRSA02J-392NY	MG RESISTOR	3.9K 5% 1/10W	
	R 107	NRSA02J-123NY	MG RESISTOR	12K 5% 1/10W	
	R 108	NRSA02J-222NY	MG RESISTOR	2.2K 5% 1/10W	
	R 109	NRSA02J-152NY	MG RESISTOR	1.5K 5% 1/10W	
	R 110	NRSA02J-152NY	MG RESISTOR	1.5K 5% 1/10W	
	R 111	NRSA02J-562NY	MG RESISTOR	5.6K 5% 1/10W	
	R 112	NRSA02J-122NY	MG RESISTOR	1.2K 5% 1/10W	
	R 113	NRSA02J-271NY	MG RESISTOR	270 5% 1/10W	
	R 114	NRSA02J-391NY	MG RESISTOR	390 5% 1/10W	
	R 115	NRSA02J-332NY	MG RESISTOR	3.3K 5% 1/10W	
	R 116	NRSA02J-182NY	MG RESISTOR	1.8K 5% 1/10W	
	R 117	NRSA02J-332NY	MG RESISTOR	3.3K 5% 1/10W	
	R 118	NRSA02J-152NY	MG RESISTOR	1.5K 5% 1/10W	
	R 119	NRSA02J-203NY	MG RESISTOR	20K 5% 1/10W	
	R 120	NRSA02J-102NY	MG RESISTOR	1.0K 5% 1/10W	
	R 121	NRSA02J-122NY	MG RESISTOR	1.2K 5% 1/10W	
	R 202	NRSA02J-102NY	MG RESISTOR	1.0K 5% 1/10W	
	R 203	NRSA02J-183NY	MG RESISTOR	18K 5% 1/10W	
	R 205	NRSA02J-220NY	MG RESISTOR	22 5% 1/10W	
	R 206	NRSA02J-392NY	MG RESISTOR	3.9K 5% 1/10W	
	R 207	NRSA02J-123NY	MG RESISTOR	12K 5% 1/10W	
	R 208	NRSA02J-222NY	MG RESISTOR	2.2K 5% 1/10W	
	R 209	NRSA02J-152NY	MG RESISTOR	1.5K 5% 1/10W	
	R 210	NRSA02J-152NY	MG RESISTOR	1.5K 5% 1/10W	
	R 211	NRSA02J-562NY	MG RESISTOR	5.6K 5% 1/10W	
	R 212	NRSA02J-122NY	MG RESISTOR	1.2K 5% 1/10W	
	R 213	NRSA02J-271NY	MG RESISTOR	270 5% 1/10W	
	R 214	NRSA02J-391NY	MG RESISTOR	390 5% 1/10W	
	R 215	NRSA02J-332NY	MG RESISTOR	3.3K 5% 1/10W	
	R 216	NRSA02J-182NY	MG RESISTOR	1.8K 5% 1/10W	
	R 217	NRSA02J-332NY	MG RESISTOR	3.3K 5% 1/10W	
	R 218	NRSA02J-152NY	MG RESISTOR	1.5K 5% 1/10W	
	R 219	NRSA02J-203NY	MG RESISTOR	20K 5% 1/10W	
	R 220	NRSA02J-102NY	MG RESISTOR	1.0K 5% 1/10W	
	R 221	NRSA02J-122NY	MG RESISTOR	1.2K 5% 1/10W	
	R 301	NRS181J-221NY	MG RESISTOR	220 5% 1/8W	
	R 302	NRS181J-101NY	MG RESISTOR	100 5% 1/8W	
	R 304	NRSA02J-393NY	MG RESISTOR	39K 5% 1/10W	
	R 305	NRSA02J-103NY	MG RESISTOR	10K 5% 1/10W	
	R 306	NRSA02J-103NY	MG RESISTOR	10K 5% 1/10W	
	R 307	NRSA02J-103NY	MG RESISTOR	10K 5% 1/10W	

BLOCK NO. 08

A	REF.	PARTS NO.	PARTS NAME	REMARKS	SUFFIX
	R 308	NRSA02J-152NY	MG RESISTOR	1.5K 5% 1/10W	
	R 309	NRSA02J-152NY	MG RESISTOR	1.5K 5% 1/10W	
	R 310	NRS181J-820NY	MG RESISTOR	82 5% 1/8W	
	R 311	NRS181J-820NY	MG RESISTOR	82 5% 1/8W	
	R 313	NRSA02J-3R3NYM	RESISTOR	3.3 5% 1/10W	
	R 314	NRSA02J-223NY	MG RESISTOR	22K 5% 1/10W	
	R 315	NRSA02J-100NY	MG RESISTOR	10 5% 1/10W	
	R 316	NRSA02J-223NY	MG RESISTOR	22K 5% 1/10W	
	R 317	NRSA02J-100NY	MG RESISTOR	10 5% 1/10W	
	R 318	NRSA02J-123NY	MG RESISTOR	12K 5% 1/10W	
	R 319	NRSA02J-152NY	MG RESISTOR	1.5K 5% 1/10W	
	R 321	NRSA02J-123NY	MG RESISTOR	12K 5% 1/10W	
	R 322	NRSA02J-152NY	MG RESISTOR	1.5K 5% 1/10W	
	R 327	NRSA02J-474NY	MG RESISTOR	470K 5% 1/10W	
	R 328	NRSA02J-222NY	MG RESISTOR	2.2K 5% 1/10W	
	R 329	NRSA02J-222NY	MG RESISTOR	2.2K 5% 1/10W	
	R 330	NRSA02J-0R0NY	MG RESISTOR	5% 1/10W	
	R 335	NRSA02J-222NY	MG RESISTOR	2.2K 5% 1/10W	
	R 336	NRSA02J-392NY	MG RESISTOR	3.9K 5% 1/10W	
	R 338	NRSA02J-222NY	MG RESISTOR	2.2K 5% 1/10W	
	R 339	NRSA02J-222NY	MG RESISTOR	2.2K 5% 1/10W	
	R 341	NRSA02J-222NY	MG RESISTOR	2.2K 5% 1/10W	
	R 343	NRSA02J-0R0NY	MG RESISTOR	5% 1/10W	
	R 345	NRSA02J-222NY	MG RESISTOR	2.2K 5% 1/10W	
	R 346	NRSA02J-0R0NY	MG RESISTOR	5% 1/10W	
	R 347	NRSA02J-392NY	MG RESISTOR	3.9K 5% 1/10W	
	R 348	NRSA02J-222NY	MG RESISTOR	2.2K 5% 1/10W	
	R 350	NRSA02J-472NY	MG RESISTOR	4.7K 5% 1/10W	
	R 351	NRSA02J-151NY	MG RESISTOR	150 5% 1/10W	
	R 353	NRSA02J-472NY	MG RESISTOR	4.7K 5% 1/10W	
	R 354	NRSA02J-151NY	MG RESISTOR	150 5% 1/10W	
	R 355	NRSA02J-332NY	MG RESISTOR	3.3K 5% 1/10W	
	R 356	NRSA02J-103NY	MG RESISTOR	10K 5% 1/10W	
	R 357	NRSA02J-103NY	MG RESISTOR	10K 5% 1/10W	
	R 358	NRSA02J-123NY	MG RESISTOR	12K 5% 1/10W	
	R 359	NRSA02J-123NY	MG RESISTOR	12K 5% 1/10W	
	R 360	NRSA02J-433NY	RESISTOR	43K 5% 1/10W	
	R 361	NRSA02J-183NY	MG RESISTOR	18K 5% 1/10W	
	R 362	NRSA02J-123NY	MG RESISTOR	12K 5% 1/10W	
	R 363	NRSA02J-183NY	MG RESISTOR	18K 5% 1/10W	
	R 364	NRSA02J-433NY	RESISTOR	43K 5% 1/10W	
	R 365	NRSA02J-203NY	MG RESISTOR	20K 5% 1/10W	
	R 366	NRSA02J-123NY	MG RESISTOR	12K 5% 1/10W	
	R 367	NRSA02J-102NY	MG RESISTOR	1.0K 5% 1/10W	
	R 368	NRSA02J-391NY	MG RESISTOR	390 5% 1/10W	
	R 369	NRSA02J-391NY	MG RESISTOR	390 5% 1/10W	
	R 371	NRS181J-222NY	MG RESISTOR	2.2K 5% 1/8W	
	R 374	NRSA02J-912NY	RESISTOR	9.1K 5% 1/10W	
	R 375	NRSA02J-683NY	MG RESISTOR	68K 5% 1/10W	
	R 376	NRS181J-6R8NY	MG RESISTOR	6.8 5% 1/8W	
	VR101	QVPA603-503A	SEMI.V.RESISTOR		
	VR201	QVPA603-503A	SEMI.V.RESISTOR		
	VR301	QVPA603-103M	SEMI.V.RESISTOR		

■ Reel Pulse Board

BLOCK NO. 09

⚠	REF.	PARTS NO.	PARTS NAME	REMARKS	SUFFIX
	CN 1	EMV7159-010	10P PLUG ASSY		
	CN 1	EMV7159-010	10P PLUG ASSY		
	D 1	1SR139-100	SI DIODE		
	D 1	1SR139-100	SI DIODE		
	IC 1	SG-105F3-BB/C	PHOTO SENSER		
	IC 1	SG-105F3-BB/C	PHOTO SENSER		
	P 1	VMZ0015-002	POST PIN		
	P 1	VMZ0015-002	POST PIN		
	SW 1	MXS00220MVL0	CASSETTE SWITCH	R.REC	
	SW 2	MXS00220MVL0	CASSETTE SWITCH	TAPE	
	SW 2	MXS00220MVL0	CASSETTE SWITCH	TAPE	
	SW 4	MXS00220MVL0	CASSETTE SWITCH	70U	
	SW 4	MXS00220MVL0	CASSETTE SWITCH	70U	
	SW 5	MXS00220MVL0	CASSETTE SWITCH	F.REC	
	SW 6	QSEC001-E03	SWITCH		
	SW 6	QSEC001-E03	SWITCH		

-MEMO-

14.Packing

■ B/E/EN/G/VX Version Section

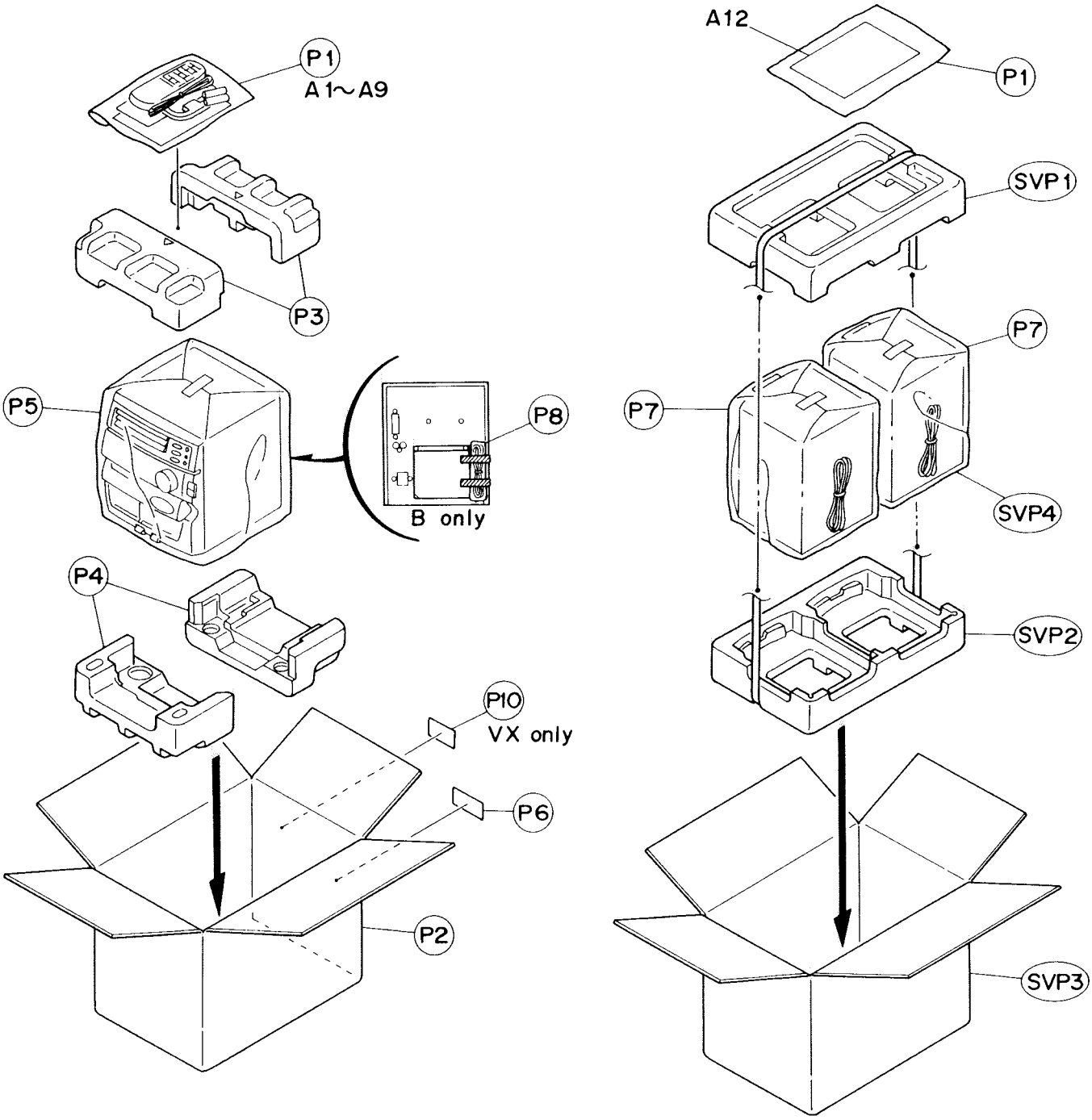

■ Packing Parts List (B/E/EN/G/VX Version)

BLOCK NO. M6MM

⚠	REF.	PARTS NO.	PARTS NAME	REMARKS	QTY	SUFFIX	CLR
	P 1	E309758-002	POLY BAG	FOR INSTRUCTION	2		
	P 2	FMPC9003-002	CARTON ASSY		1		
	P 3	FMPH1013-001	CUSHION UPPER	FOR SET	1		
	P 4	FMPH1014-001	CUSHION BOTTOM	FOR SET	1		
	P 5	E309758-017	POLY BAG	FOR SET	1		
	P 6	----------	COMPUTER LABEL		1		
	P 7	QPGA010-MX401	POLY BAG	FOR SPEAKER	2		
	P 8	QPGA010-01505	POLY BAG	FOR POWER CORD	1	B	
	P 10	E409393-004	GOST LABEL		1	VX	
	SVP 1	FMPH1013-401A	SPK CUSHION	UPPER	1		
	SVP 2	FMPH1014-401B	SPK CUSHION	BOTTOM	1		
	SVP 3	FMPC9003-D401	SPK CARTON		1		

■ Accessories Parts List (B/E/EN/G/VX Version)

BLOCK NO. M7MM

⚠	REF.	PARTS NO.	PARTS NAME	REMARKS	QTY	SUFFIX	CLR
	A 1	EQB4001-015	AM LOOP ANT		1		
	A 2	FMUN9015-671M	INSTRUCTIONS		1	B	
		FMUN9015-661M	INSTRUCTIONS		1	E,G	
		FMUN9015-651M	INSTRUCTIONS		1	EN	
		FMUN9015-921M	INSTRUCTIONS		1	VX	
	A 3	EWP503-001	ANTENNA WIRE		1		
	A 5	BT-20134	WARRANTY CARD		1	G	
		BT-54003-1	WARRANTY CARD		1	B	
	A 6	BT-20066A	SERVICE NETWORK		1	B	
	A 7	RM-SED40TEU	REMOCON		1		
		E43486-340A	SAFETY SHEET		1	B	
	A 9	R6PPTT-2STSM	BATTERY		1		
	A 12	FMUN9019-681M	INSTRUCTIONS	SPEAKER	1		
	SVP 4	MXD401H-SPBOX	SPEAKER ASS'Y		2		

■ A/C/J/U/UB/UP/US/U Version Section

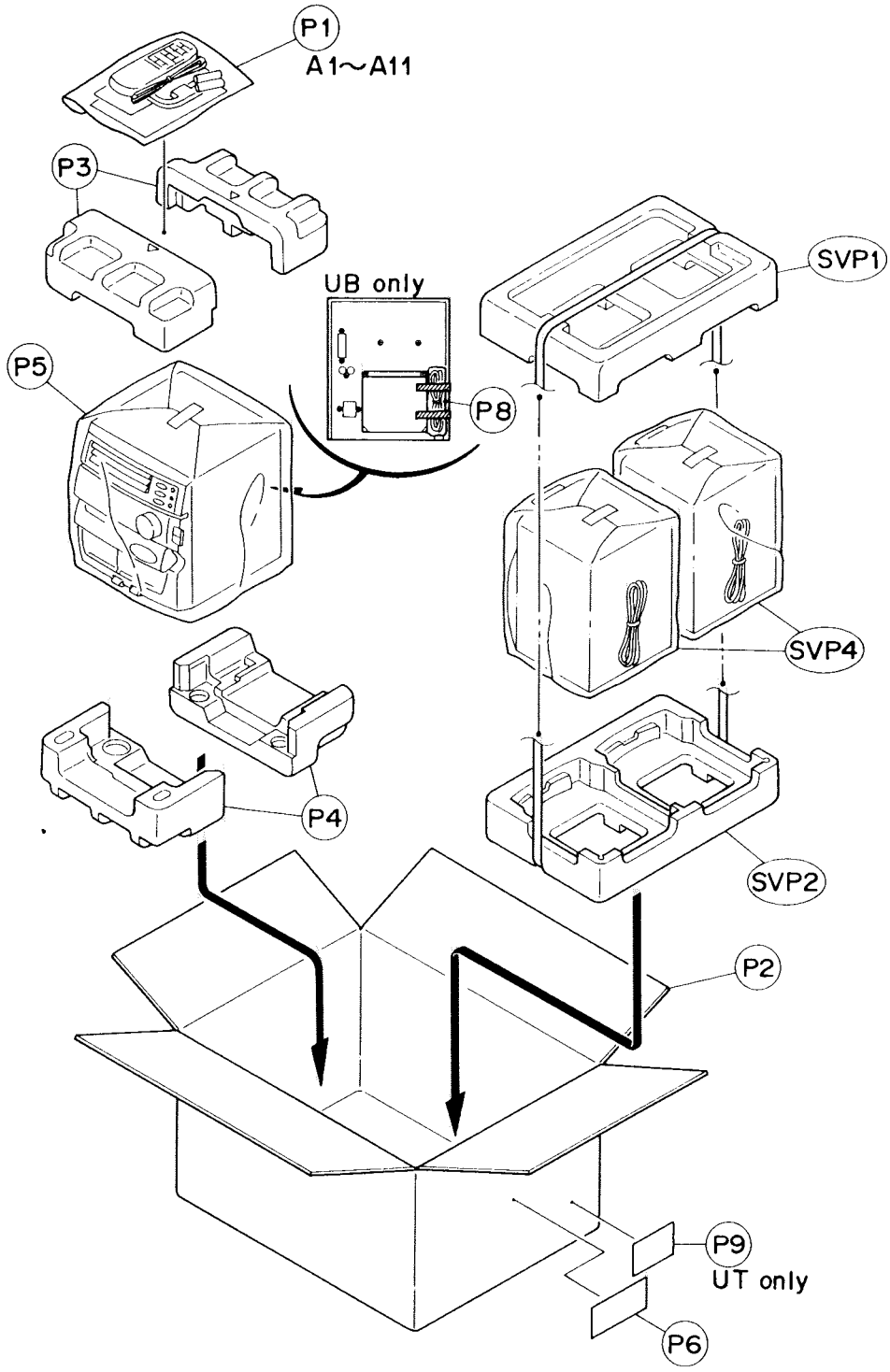

¡ Packing Parts List (A/C/J/U/UB/UP/US/UT/ Version)

BLOCK NO. M6MM

⚠	REF.	PARTS NO.	PARTS NAME	REMARKS	QTY	SUFFIX	CLR
	P 1	E309758-002	POLY BAG	FOR INSTRUCTION	1		
	P 2	FMPC9003-001	CARTON ASSY		1	A,C,J	
		FMPC9003-003	CARTON ASSY		1	U,UB,UP,US,U	
	P 3	FMPH1011-001	CUSHION UPPER	FOR SET	1		
	P 4	FMPH1012-001	CUSHION BOTTOM	FOR SET	1		
	P 5	E309758-017	POLY BAG	FOR SET	1		
	P 6	----------	COMPUTER LABEL		1		
	P 7	QPGA010-MX401	POLY BAG	FOR SPEAKER	2		
	P 8	QPGA010-01505	POLY BAG	FOR POWER CORD	1	UB	
	P 9	FMND3007-005	RATING LABEL		1	UT	
	SVP 1	FMPH1011-401A	SPK CUSHION	UPPER	1		
	SVP 2	FMPH1012-401B	SPK CUSHION	BOTTOM	1		

¡ Packing Parts List (A/C/J/U/UB/UP/US/UT/ Version)

BLOCK NO. M7MM

⚠	REF.	PARTS NO.	PARTS NAME	REMARKS	QTY	SUFFIX	CLR
	A 1	EQB4001-015	AM LOOP ANT		1		
	A 2	FMUN9002-691M	INSTRUCTIONS		1	A	
		FMUN9002-621M	INSTRUCTIONS		1	C	
		FMUN9002-601M	INSTRUCTIONS		1	J	
		FMUN9002-181M	INSTRUCTIONS		1	U,UB,US,UT	
		FMUN9002-151M	INSTRUCTIONS		1	UP	
	A 3	EWP201-011	ANTENNA WIRE		1		
	A 4	BT-56004-4	WARRANTY CARD		1	UP	
	A 5	BT-52002-1	WARRANTY CARD		1	C	
		BT-20047F	WARRANTY CARD		1	J	
		BT-56001-1	WARRANTY CARD		1	A	
	A 6	BT-65002-1	SERVICE NETWORK		1	A	
		BT-20071B	SERVICE NETWORK		1	C	
	A 7	BT-20044G	SAFETY SHEET		1	C,J	
	A 8	RM-SED40TEU	REMOCON		1	A	
		RM-SED40TU	REMOCOM		1	C,J	
		RM-SED50TXU	REMOCON		1	U,UB,UP,US,U	
	A 9	R6PPTT-2STSM	BATTERY		1		
	A 10	ENZ2202-001	AC PLUG ADAPTER		1	US	
	A 11	VMZ0139-001	CONNECT PLUG		1	U,UT	
	SVP 4	MXD401H-SPBOX	SPEAKER ASS'Y		2	A,C,J	
		MXD401K-SPBOX	SPEAKER ASS'Y		2	U,UB,UP,US,U	